QEX 49

$1.75

APRIL 1986

The ARRL Experimenter's Exchange

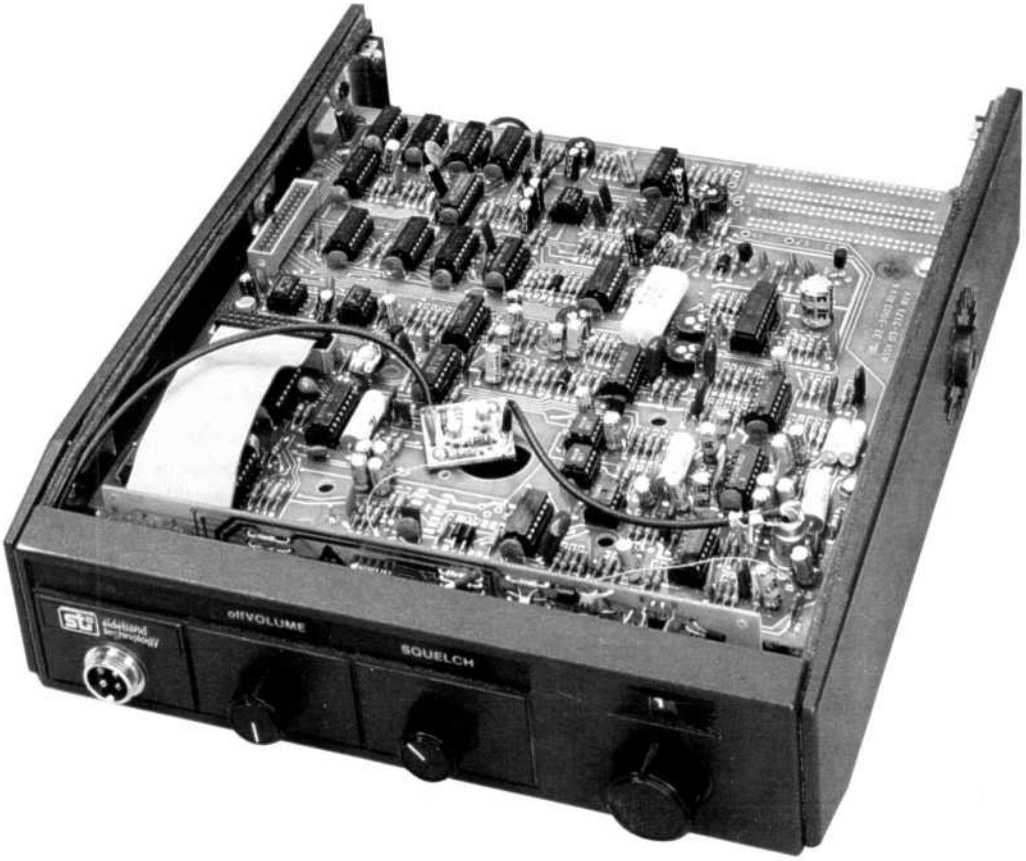

QEX (ISSN: 0886-8093) is published monthly by the American Radio Relay League, Newington, CT USA.

Offices
225 Main St, Newington, CT 06111 USA
Telephone: 203-666-1541
Telex: 650215-5052 MCI
Electronic Mail: MCI MAIL ID:215-5052
(user name ARRL)

Subscription rate for 12 issues:
In the US by Third Class Mail:
ARRL Member $6, nonmember $12;
US by First Class Mail:
ARRL Member $11, nonmember $17;
Elsewhere by Airmail:
ARRL Member $21, nonmember $27.

QEX subscription orders, changes of address, and reports of missing or damaged copies may be marked: *QEX* Circulation.

Members are asked to include their membership control number or a label from their *QST* wrapper when applying.

TABLE OF CONTENTS

ACSSB IN AMATEUR RADIO — 5

By Paul Rinaldo, W4RI

Can this technology one day replace FM? ACSSB's past and present is examined, but what about its future in mobile communications? And where does it fit into Amateur Radio?

A COAX/TRAP TI-99/4A PROGRAM IN BASIC — 8

By John S. Davis, WB4KOH

If you own a TI-99/4A and are looking for assistance with those L, C, XL and XC calculations for putting up a coaxial antenna trap, this program is for you.

THE CAD EXPERIENCE — 9

By Courtney Duncan, N5BF

Many computerized drawing systems are available on the market. Which one is right for your business? Well, you'll have to research that, but maybe we can help by exposing available systems such as this one.

NO-MODIFICATION HF PACKET WITH THE TAPR TNC-1 OR HEATH HD-4040 — 11

By John W. Gregory, W4QF

With a few wire modifications of the FADCA modem kit, you can communicate via high-frequency packet.

COLUMNS

CORRESPONDENCE — 3

A communications breakthrough on the 160-190 kHz experimental band, ACSSB on the air and frequency measurements for the Motorola MC3359P.

>50 — 12

By Bill Olson, W3HQT

Transistor packaging—how they are formed and what goes into them—is discussed.

INTELLECTUAL PROPERTIES — 16

By William Conwell, K2PO

Almost every commercial product displays a patent or trademark symbol. Why? What legal steps did the designer have to take to obtain those rights?

ABOUT THE COVER

In 1985, this Sideband Technology, Inc ACSSB unit was tested in the ARRL laboratory. The transceiver was put on frequency and the operator successfully contacted other SSB stations via OSCAR 10. More on ACSSB can be found on page 5.

THE AMERICAN RADIO RELAY LEAGUE, INC

The American Radio Relay League, Inc, is a noncommercial association of radio amateurs, organized for the promotion of interest in Amateur Radio communication and experimentation, for the establishment of networks to provide communications in the event of disasters or other emergencies, for the advancement of the radio art and of the public welfare, for the representation of the radio amateur in legislative matters, and for the maintenance of fraternalism and a high standard of conduct.

ARRL is an incorporated association without capital stock chartered under the laws of the State of Connecticut, and is an exempt organization under Section 501(c)(3) of the Internal Revenue Code of 1954. Its affairs are governed by a Board of Directors, whose voting members are elected every two years by the general membership. The officers are elected or appointed by the Directors. The League is noncommercial, and no one who could gain financially from the shaping of its affairs is eligible for membership on its Board.

"Of, by, and for the radio amateur," ARRL numbers within its ranks the vast majority of active amateurs in the nation and has a proud history of achievement as the standard-bearer in amateur affairs.

A bona fide interest in Amateur Radio is the only essential qualification of membership; an Amateur Radio license is not a prerequisite, although full voting membership is granted only to licensed amateurs in the US and Canada.

Purposes of *QEX*:

1) provide a medium for the exchange of ideas and information between Amateur Radio experimenters
2) document advanced techncial work in the Amateur Radio Field
3) support efforts to advance the state of the Amateur Radio art.

All correspondence concerning *QEX* should be addressed to the American Radio Relay League, 225 Main Street, Newington, CT USA 06111. Envelopes containing manuscripts and correspondence for publication in *QEX* should be marked: Editor, *QEX*.

Both theoretical and practical technical articles are welcomed. Manuscripts should be typed and double spaced. Please use the standard ARRL abbreviations found in the 1985 and 1986 ARRL Handbooks and in the January 1984 issue of *QST*. Photos should be glossy, black-and-white positive prints of good definition and contrast, and should be the same size or larger than the size that is to appear in *QEX*.

Empirically Speaking. . .

Control of Third-Party Communications

This may seem like a strange subject for a technical periodical, but the control of Amateur Radio stations while transmitting third-party traffic seems to be getting in the way of technical progress. This is an issue that seems to have hams and the FCC on different sides of the fence at the moment.

The story has early roots. The worldwide regulation of landline telegraph goes back to the 1865 International Telegraph Convention in Paris. By 1906, in Berlin, conferees were talking about carving the radio spectrum into specific uses to minimize interference. During the first days of radio, there were no such things as radio services; in a sense, everyone was an amateur experimenter. As radio developed, national government and international regulation separated firmament from firmament by creating different kinds of activity into radio services. Amateurs could no longer transmit music: That was "broadcasting." With exceptions, amateurs weren't supposed to handle other people's messages internationally: Wasn't that the province of the already-established telegraph services, known today as "common carriers?" In 1932, the International Telecommunication Convention held in Madrid agreed to prohibit amateurs from handling international third-party messages unless specifically permitted by the two countries involved.

The long-term trend was fairly clear: As special communications needs and techniques matured to commercial proportions, they spun away from Amateur Radio, and amateurs were not supposed to do things that would take bread from someone else's mouth. That all seemed pretty sensible. The commercial interests were making a living, and Amateur Radio still had enough frequencies and reasonable latitude. For a long while, the basic tenet was: If it isn't for pay, it's okay for amateurs to do it. The first FCC ruling which broke with this tradition was issued in 1972 under Docket 19245, known more popularly as the "Eye Bank" docket, in which "business communications" was prohibited. Then in 1978, the Commission interpreted its rules to mean that an amateur station could not be operated under automatic control while transmitting third-party traffic, but did so in an autopatch context in order to ensure that telephone interconnects did not become the "tail that wagged the dog." All these no-nos were written in the FCC rules: They were left to the individual amateur to bear in mind while operating, which was then a labor-intensive activity.

Enter the computer. That device made it possible to control such things as computer-based message systems (CBMSs), repeaters, packet-radio network nodes, auxiliary links, satellites and other operations automatically. The FCC, in its Report and Order for PR Docket No. 85-105 released January 16, 1986, would prohibit amateurs from operating a station under automatic control while transmitting third-party traffic. Word from the FCC staff was that they were trying to prevent hackers and commercial interests from intruding on the amateur packet-radio network. To operators of digipeaters and CBMSs, that meant that they would have to have a control operator on duty at all times watching third-party traffic being automatically handled simply to tell when the control operator should be present. You can be sure that the League has filed a Petition for Partial Reconsideration, which recommended that only the origination (the initial transmission into the network) need be under operator control. The Tucson Amateur Packet Radio group filed a similar petition likening the packet-radio network as a pipe: You just need to check what goes into the pipe, not repeatedly throughout the pipe to know what the pipe is handling.

On February 26 and 27, ARRL President Larry Price, W4RA, and Executive Vice President David Sumner, K1ZZ, were in Washington representing the League, amateur packet radio, and, in terms of impact, all radio amateurs licensed by the FCC. After the discussions with the Commission, the League filed a Motion for Extraordinary Relief specifically for third-party messages originated by another amateur station not under automatic control for packet-radio transmission using AX.25 protocol. The Commission now has to deal with this Petition and some nineteen Petitions for Reconsideration filed in this proceeding.

It is clear that the case of Automation v Control of Third Party Traffic has come to a head under Docket 85-105. Hopefully, it will be resolved in a way that will protect the Amateur Radio service against intruders yet encourage the phenomenal growth of packet radio.—W4RI

Correspondence

ACSSB Board for Sale

I have become involved in other activities and would like to sell my ACSSB board. The incomplete RF board and instruction manual was initially purchased for $30, and I will sell it for that amount, including shipment. It has not been changed in any way since I received it.—*Melvin S. Breyfogle, W0MDM, 18 North 7th St, Estherville, IA 51334.*

Additional Source for Info on EMP

Looking over the EMP references list in the January 1986 *QEX* Correspondence column brought another source to mind. The title of the book is, *EMP Radiation and Protective Techniques*, by Ricketts, Bridges and Miletta, Wiley and Sons, Chap 4, pp 122-217.

This information directly addresses the problem of shielding civilian communications equipment from EMP. It is worthwhile checking out.—*Wayne Cooper, AG4R, 9302 NW 2nd Place, Miami, FL 33150.*

Communications Breakthrough!

Many have wondered if communication on the experimental band of 160 to 190 kHz could ever be accomplished as suggested in the September 1985 issue of *QEX*, page 2. Well, it has! The accomplishment took place on January 20 and not using coherent CW as first thought, but using ordinary techniques and very narrow bandwidths. A one-watt beacon in Central California was heard on Kauai. Congratulations to Michael Mideke, WB6EER, and Sheldon Remington, NI6E.—*Cliff Buttschardt, W6HDO, 950 Pacific St, Morro Bay, CA 93442.*

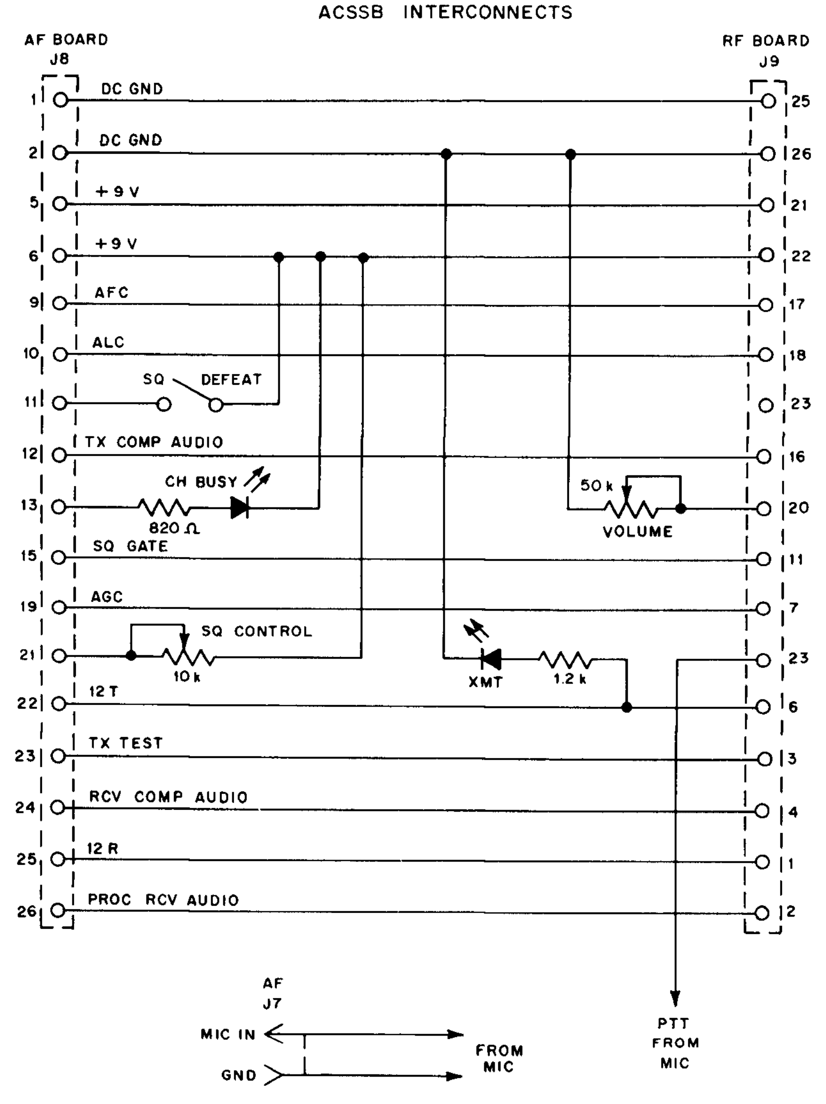

Fig 1—Diagram of the necessary ACSSB interconnects between the AF and RF boards.

ACSSB On The Air

I have finally been able to get my Sideband Technology ACSSB boards going. I am using an STI TCXO module that a local communications technician was kind enough to donate. Varactor tuning allows me to tune from 145.960 to 145.975 MHz. The output power was found to be only 50 mW so I added a single-stage RF amplifier and a few modifications to the RF-output circuitry. This brought the output up to about 1 watt.

I'm using a mic preamp circuit with a 50-kilohm dynamic mic. The circuit required some bias adjustments for my transistors, but the boards were aligned easily and seem to be working nicely. I am attempting to arrange 2-meter tests with the ACSSB system over a tropo path with Jim Eagleson, WB6JNN. I am also interested in any OSCAR 10 ACSSB tests that may occur.

Fig 1 shows a diagram of the interconnects necessary between the AF and RF boards, including various controls and lamps. Fig 2 is the 1-W linear amplifier circuit and modifications to the RF board.

Cliff Buttschardt, W6HDO, lives nearby and received a repeater AF board and a high-band RF board in his package. Both boards have been converted and are also up and running. We've been running low power on 145.960 to 145.975 MHz with varactor tuning.—*Ed Larsen, KF6NX, 950 Pecho St, Morro Bay, CA 93442.*

Measurements on the MC3359P

I have conducted a set of measurements on the Motorola Semiconductor Products MC3359P low-power, narrow-band FM IF integrated

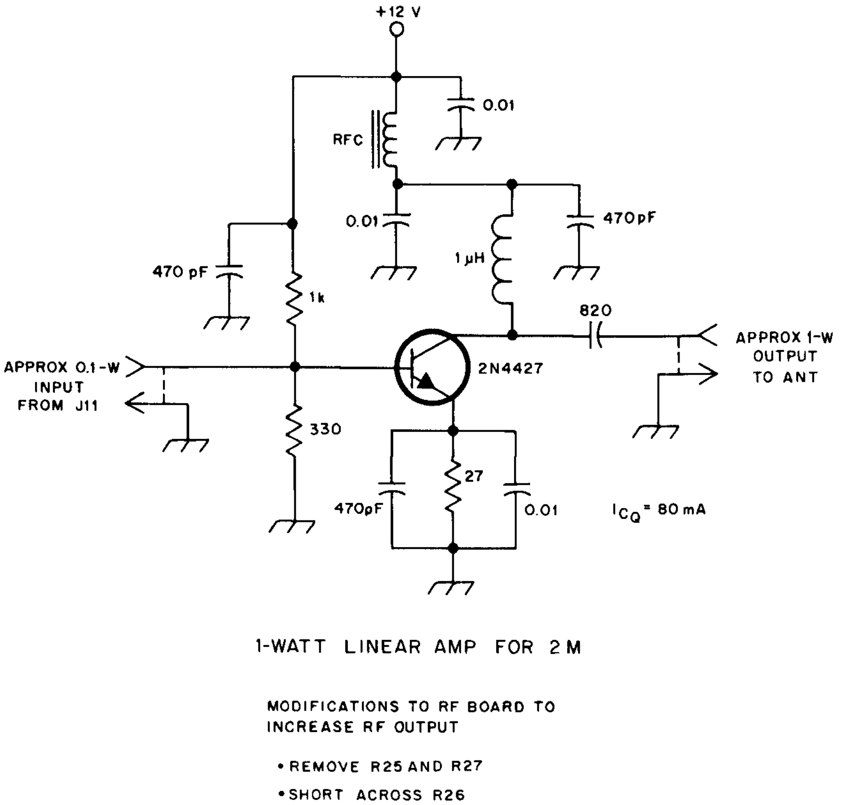

Fig 2—The ACSSB 1-W linear amplifier circuit for 2 meters, and modifications to the RF board to increase RF output.

Table 1

Motorola Semiconductor Products MC3359P Integrated Circuit

	Input Impedance	
Frequency (MHz)	*Magnitude (kilohms)*	*Angle (deg)*
1.0	3.55	− 5.2
2.0	3.49	−10.0
4.5	3.26	−21.1
9.0	2.72	−36.6
10.7	2.52	−41.2
15.0	2.08	−49.6
16.9	1.92	−52.1
21.4	1.712	−57.5
25.0	1.517	−60.5
29.5	1.322	−63.1
30.0	1.304	−63.5
35.0	1.145	−65.8
40.0	1.020	−67.7
45.0	0.920	−69.1
49.9	0.842	−70.0
52.5	0.807	−70.7
55.0	0.775	−71.3
60.0	0.717	−72.4
70.0	0.622	−74.2
80.0	0.546	−75.5

circuit. The measurements were made as a part of the preliminary design of a UHF receiver that will use the chip at a 45-MHz center intermediate frequency. While the equipment was available, I measured the complex input impedance over a range of frequencies. The Motorola data sheet (DS9569) gives only a typical spot frequency (10.7 MHz) impedance, and, for many applications, this is not adequate.

The measurement frequencies were selected on the basis for their use to the amateur service as common IFs. Other frequencies were included so interpolations could be made, if necessary. The measurements were made on only one IC package with the Hewlett-Packard HP 4193A vector impedance meter, using the "in-circuit" probe. The date code on the IC was 8027. Operating voltage was +8 volts at 25 degrees Celsius. The results are listed in Table 1.

The parallel equivalent of the 10.7-MHz input impedance measured during this text compares favorably with the data sheet values of 3.6-kilohms in parallel with a 2.2-pF capacitance. No attempt was made to minimize the stray capacitance of the layout. The IC was mounted during the test in a low-profile plastic socket and this, and all supporting components, were mounted on single-side, copper-clad perfboard. The input impedance was measured directly into pin 18 without other components connected to this pin.

I hope this information may be of use to other amateurs in developing receiver designs with this component. If others have used this IC at a 45-MHz or other intermediate frequency, I would enjoy hearing from them. My work number is 301-266-1830; home is 301-721-2077.—*John H. Klingelhoeffer, WB4LNM, 1500 Kingsway Dr, Gambrills, MD 21054.*

Bits

OSCAR Meeting Announcement

The San Francisco Bay Area OSCAR User's Group is pleased to announce there will be two meetings concerning OSCAR satellite operation this year in the Bay area.

The first meeting will be held in San Mateo, Sunday, May 18th. Program topics will include information aimed at those getting started on OSCAR, a review of Phase IIIC, Mode L, Mode A, and a Q & A session about OSCAR. There are plans for equipment displays, computer program demonstrations, video tapes about OSCAR 10, as well as some specially-designed equipment for OSCAR operation.

The meeting will be from 9 am to 4 pm. Pre-registration is required. The fee covers information handouts and a buffet lunch. Profits from the meeting will be forwarded to the AMSAT fund for the construction of future satellites.

Those who have attended these meetings before will receive registration materials as soon as they are available. Those who have not attended in the past, but would like to receive more information about the meetings, should send an SASE to Ross Forbes, WB6GFJ, AMSAT Coordinator, PO Box 1, Los Altos, CA 94023-0001.

The second meeting will be held in October as part of the ARRL Pacific Division convention.—*WB6GFJ*

ACSSB in Amateur Radio

By Paul L. Rinaldo, W4RI
Editor, *QEX*

How would you like a modulation technique with the good sound and noise quieting of frequency modulation that takes only a fraction of the spectrum space of FM? That's the main idea behind amplitude-compandored single sideband (ACSSB; ACSB is a registered trademark of Sideband Technology, Inc). Another benefit is a lower on-the-air duty cycle, important for satellites with a modest power budget and for battery-operated portable radio equipment. Land-mobile and satellite services have discovered the advantages of ACSSB and it's time that radio amateurs took a close look, too. At present, the technique is somewhat experimental. Tomorrow, it may be one of the many modulation modes used in Amateur Radio, or it may gain enough popularity to virtually replace FM.

The term "compandored" may not be familiar; some definitions are in order. "Compandor" is a contraction of the words "compressor" and "expander." According to the *Dictionary of Electrical and Electronics Terms* published by the Institute of Electrical and Electronics Engineers, a compressor is "A transducer that for a given input amplitude range produces a smaller output range." Don't let that scare you. It simply means cutting big signals down to size to make them easier to transmit.

Some authors use the word "compandored" while others say "companded." Neither expression is incorrect while the dictionary is still in draft form. "Compandored" is used most often and will be used throughout this article.

Compressors are built into most modern voice transmitters. The use of compressors is common because human speech has a wide dynamic range. Speech peaks are 10 dB above the average power in the voice, and that puts a strain on transmitters. To understand speech, you need to hear the intelligence carried by the average power. The average-power part of speech should be somewhat above the noise level or you'll have great difficulty deciphering speech on unfamiliar subjects. Therefore, the job of the compressor is to leave the peaks alone at full power, but pull the power of the average speech up somewhat so it won't drag in the noise.

There is a limit to compression, however. Beyond that limit, intelligibility gets increasingly worse until you can't understand anything. Often, noise rushes in to fill the pauses between speech. And, the first utterance seems to blow away the audio until the automatic gain control gets a hold of itself. ACSSB is not like that.

A compressed-voice signal on an ordinary receiver will sound adequate to the average listener, but those with a critical ear will notice some loss of dynamic range. This means that both the loud and soft parts of speech are heard almost at the same volume. Enter the expander. The IEEE dictionary says that's: "A transducer which for a given amplitude range of input voltages produces a larger range of output signals." The dictionary goes on to say: "One important type of expander employs the envelope of speech signals to expand their volume range." Well, that's one way to do it: Use the speech envelope itself to tell the expander when, and how much, to expand. While this expansion technique works, it is not as sophisticated as those using a separate signal to let the receiver know how much expansion to apply, syllable by syllable. In ACSSB, the separate signal to convey compression or expansion information is called a "pilot."

ACSSB's Roots

Let's look at ACSSB's historical perspective. Though the idea was conceived several decades ago, ACSSB as we know it today has its roots in the land-mobile industry. It seems that everyone wants some type of radio in his or her vehicle. When most of the FM channels filled up some years ago, more were made by halving the channels. The FCC added more channels by using reserved spectrum and requesting that the TV broadcasting channels be shared with two-way mobile radios. It was well known that single sideband used only about 3-kHz channels compared with 15 or 20 kHz for FM, thus, SSB seemed to be an answer. Standard SSB was tried with land-mobile operators, but they couldn't master the CLARIFIER control. And, the signal faded in and out repeatedly. These people were vehicle drivers who were accustomed to two-way FM radio. They didn't want to play radio operator.

ACSSB seemed to be an answer to spectrum crowding. A pilot was added just above the audio range at 3.1 kHz. The receiver had an automatic frequency control locked to the pilot to eliminate the CLARIFIER knob. To restore the original dynamic range of voice, the pilot was modulated with information on when to expand and how much. The receiver was told to increase its gain on instantaneous peaks and to decrease it during pauses. The result was a great improvement in audio signal-to-noise ratio. Engineers believed that ACSSB could deliver the same quality as FM and do it in 5-kHz channels as opposed to 15- or 20-kHz channels for FM. That would multiply the number of channels in the land-mobile bands by 3 or 4.

As an aside, spectrum efficiency must be defined appropriately for different technologies. The appropriate definition for spectrum efficiency for cellular mobile radio is the number of calls per hour per square mile. Thus, if ACSSB (narrowband), is almost 6 times more efficient, spectrally, that is true only for point-to-point links virtually free of channel interference problems. Cellular systems reuse frequencies many times across a system and considered parameters are voice quality, transmitted power and cell size.[1]

The early field trials of ACSSB radios weren't all successful, probably because the equipment wasn't perfected. Some potential users believed that ACSSB wasn't as good as FM. Others, perhaps the true believers, thought that ACSSB was a good thing and encouraged its further development. Two American companies, Sideband Technology of Rochester, New York, and Stevens Engineering Associates of Mountlake Terrace, Washington, produced well-engineered ACSSB radios.

The FCC was intensely interested in spectrum conservation in the land-

---

Notes

[1] Lee, Dr William C. Y., "Cellular's 30-kHz FM," *Mobile Radio Technology,* Dec 1985, p 16, Vol 3, issue 120.

mobile bands and initiated a study of ACSSB technical characteristics in early 1982. They were specifically concerned with:

- how ACSSB would work in existing FM channels
- frequency reuse—that is how much geographical distance must there be between ACSSB stations
- minimum channel spacing between ACSSB stations

The Tests Begin

The FCC performed laboratory and field tests to compare ACSSB to FM. These tests were done at their Laurel, Maryland laboratory starting in May 1983. Ralph Haller, N4RH, who was chief of the Research Branch of the laboratory, was kind enough to invite me to witness part of the tests. We rode around in a van that was specially equipped to do simultaneous comparisons of ACSSB and FM signals transmitted from the lab. Both the ACSSB and FM transmissions were good-quality, full-quieting signals out in open terrain near the laboratory. As we drove away from the lab to areas shadowed by obstructions, we encountered spots where the signal was nulled out. Any ham familiar with 2-meter FM knows that the noise in these nulls sound like "picket fencing" in an FM receiver. That's what we heard on FM. When we stopped in the nulled areas, the noise level rose on the FM receiver up to the full amplitude of the receiver's audio which largely covered up the speech.

When we were sitting in those same nulls, the ACSSB receiver produced audio with a slight distortion. The deeper the null, the more the distortion. But when we drove through a bunch of nulls, the ACSSB audio sounded good with ever-so-slight bits of distortion in some of the nulls. The ACSSB distortion in the nulls was, to me, less bothersome than FM noise pickets. Another thing with FM is that with each null, there will always be a noise burst. On ACSSB, there will be distortion only if the other operator is saying something at that instant. If you are interested in receiving the report on this subject, write the FCC for a copy of FCC/OSTTM83-7. The report was fairly conservative, but served to bring ACSSB out of the closet. The Commission has since taken several steps to permit ACSSB on land-mobile frequencies despite some skepticism among FM users and suppliers.

I went away from the FCC lab feeling good about ACSSB and thought it had some potential in Amateur Radio. What came to mind first was using it through OSCAR 10. That particular satellite has a peak signal-to-noise ratio of around 19 dB. Remember, that's a peak under best conditions. Now, if the average power of a single-sideband voice signal is down 10 dB from the peak, the most important part of the voice is near, or more likely in, the noise. Because OSCAR 10's antenna suffered some damage during separation, signals from this satellite have a good deal of spin modulation. I thought that amplitude compandoring could help to improve the audio signal-to-noise ratio. Also, it takes some skill and a little time to tune in a conventional SSB signal properly, especially when it is in the noise and riding the roller coaster of spin modulation. The automatic-frequency control feature of ACSSB might solve the initial tuning of the signal and correct for any frequency errors resulting from the Doppler shift. ACSSB seemed to offer the quality of FM without its 100% duty cycle, which would not be compatible with OSCAR satellites with linear transponders.

The AMSAT Connection

I discussed my ideas with Tom Clark, W3IWI, and Vern Riportella, WA2LQQ, of AMSAT. We agreed to launch a program, called COMPANION, to introduce ACSSB to Amateur Radio using OSCAR 10 as a test bed. First, we needed some equipment to make the initial tests. An ACSSB transceiver was supplied by Paul Jacobs, W2IOG, then Vice President of Engineering for Sideband Technology. We used only the audio-processor and transmitter sections of the transceiver as a 2-meter exciter. The output was heterodyned to an intermediate frequency and fed into an ICOM IC-471, then to a 100-W RF amplifier. This setup was done by Greg Bonaguide, WA1VUG, formerly of the ARRL lab. We used a conventional

---

DPMM—What's In It For You?

As a mobile operator, you are interested in the ease with which communication could be established with another party. And what about those crowded band conditions? There is a possible answer to all this confusion and that is DPMM™. DPMM is an acronym for *digitally processed multi-mode modulation.* Its origin is similar to that of ACSSB because it was developed to offer spectrum efficiency in a narrowband mode—that of 5-kHz channel spacing. The development of DPMM, as with ACSSB, was to allow more users per megahertz than in FM, and reduce congestion on VHF and UHF frequencies.

Certain goals were set for the development of DPMM: Achieve acceptable performance at higher frequencies (fading on FM and distortion on ACSSB per W4RI's article); use available and inexpensive ICs to reduce both the size and cost of equipment; achieve maximum compatibility with existing FM systems; achieve maximum compatibility with existing efficient, narrowband digital-modulation techniques; and eliminate bulky or expensive parts and tight component tolerances for long-term performance stability.

The results: A mode that allows high-quality voice and high-rate data transmissions in a 5-kHz channel in the presence of multipath fading and other channel impairments inherent in the mobile environment at VHF and UHF frequencies, according to its proponents. One major claim is that DPMM offers a full "backward compatibility" with conventional NBFM. This would permit DPMM to be gradually phased into bands and/or systems where NBFM is in use without the disruptive effects which would be caused by the introduction of other, incompatible narrowband techniques.

Most of the DPMM signal processing is implemented in digital form. Modulation and demodulation is by use of a Weaver modulator, modified to include high-pass filtering and carrier insertion. The processed audio input signal is divided into two in-phase components of equal magnitude. The signal at the output of the first set of mixers results in both upper and lower sidebands. Low-pass filters remove the upper sidebands, and the lower sidebands are manipulated through high-pass filters and an added dc component (pilot carrier). The final mixer stage reinserts the upper sidebands; lower sidebands cancel and the upper ones are superimposed on the pilot carrier which is centered in the spectral gap.

In November 1984, *Mobile Radio Technology* (MRT) featured an article by Carl R. Stevenson, WA6VSE, on DPMM.[1] There, Stevenson points out the advantages and disadvantages of ACSSB use in the land-mobile service. It is also here that he embarks on a technical study of DPMM. How did it originate and why? Most importantly, what's in it for the mobile operator?

WA6SVE's article is suggested reading for those interested in the mobile communications area. For information on how to obtain a copy of the November 1984 issue of MRT, write or call *Mobile Radio Technology Magazine,* 5951 S Middlefield Rd, Littleton, CO 80123; tel 303-798-1274.

WA6SVE has been employed with numerous electrical engineering firms, including the Jet Propulsion Laboratory, who under their auspices developed and researched DPMM. Much of his career has been involved with the mobile communications industry.—KA1DYZ

---

[1] Stevenson, Carl, WA6VSE, "Narrowband DPMM Modulation is "Backward Compatible" With FM," *Mobile Radio Technology,* Nov 1984, p 24.

SSB receiver to hear the ACSSB signal sent through OSCAR 10. I was fully expecting to hear a heavily compressed voice signal that would be difficult to understand. Instead, it sounded like a perfectly normal SSB voice signal—in fact, cleaner than most on the air. We made a number of successful contacts with many SSB stations via OSCAR 10.

It was impossible to use the receiver when we were transmitting because the receiver and transmitter shared common circuitry. Sideband Technology supplied us with another transceiver that allowed us to run full duplex at W1AW. The results were encouraging. The ACSSB system produced a voice signal that, to the ear, had about a 10-dB better signal-to-noise ratio than a conventional SSB signal. In between syllables, the receiver was quiet—little or no noise. During syllables, there was some noise, which best could be described as "granularity."

Another thing I noticed was that the automatic-frequency control really worked. Once the signal was approximately tuned in, the AFC took over and put the receiver perfectly on frequency. I had not realized how much difference there was between an almost-tuned-in SSB signal and one that was exactly on frequency.

We bought sixty surplus ACSSB boards from Sideband Technology, just as they were moving from Rochester to merge with Aerotron in Raleigh, North Carolina. These boards and instruction manuals were offered to experimenters through *QEX*. Thus far, *QEX* has acted as the medium for exchange of technical information about ACSSB experiments. AMSAT's *Amateur Satellite Report* also carries information about ACSSB.

Although the Sideband Technology units helped us get started in ACSSB, they are not the only way to use this new technology. Another approach is being offered by Project OSCAR. It uses compandoring, but not the 3.1-kHz pilot carrier. So it depends on the received modulation envelope to decide when and how much expansion to use. Signal tuning is done without the aid of an automatic frequency control. While it doesn't have all the features of the most-sophisticated ACSSB radios, it does work and is certainly well worth the effort of building one. You will also find the expander useful as an accessory for your high-frequency SSB receiver. You can get more information from Jim Eagleson, WB6JNN, 15 Valdez Lane, Watsonville, CA 95076.

Conclusion

Where is all this leading? For one thing, I think that ACSSB is a definite winner for voice communications through amateur satellites using linear transponders such as the one in OSCAR 10. In my opinion, every transceiver intended for satellite communications should have a built-in ACSSB capability. Amateurs should also begin serious experimentation with ACSSB on 2-meter repeaters.

I see no technical reason why ACSSB couldn't eventually replace FM. Instead of FM channels every 15 or 20 kHz as we now have them, we could have ACSSB channels every 4 or 5 kHz. That would give us three or four times the voice channels.

This can't happen overnight. There is little ACSSB equipment on the market, and what is available is designed and priced for the land-mobile market. Japanese manufacturers would have to offer ACSSB in their products. A place to start could be all-mode 2-meter and 70-cm base-station units. Like anything new and complex, the price would be high at first, but would be reduced by use of large-scale integration chips once the market demand is there.

I would like to acknowledge the work of the following people in helping bring ACSSB technology to Amateur Radio:

Greg Bonaguide, WA1VUG
Tom Clark, W3IWI
Jim Eagleson, WB6JNN
Ralph Haller, W4RH
Paul Jacobs, W2IOG
Vern Riportella, WA2LQQ

Bits

A Medium-Power 144-MHz Amplifier

If that title has a familiar ring to it, it is because circuit details and construction information for this unit appear in *The ARRL 1986 Handbook*. Roger D. Schneider, WB9OJR, of Green Valley, IL sent in a photo of his homemade amplifier. It has since been rack mounted.

Roger writes that he has experienced no problems with it other than minor difficulties at the time of the initial smoke test. The power output is 300 + watts on 2 meters, and it helped him earn his VUCC (VHF/UHF Century Club certificate) on that band in 90 days with the assistance of two KLM 16LBXs.—*KA1DYZ*

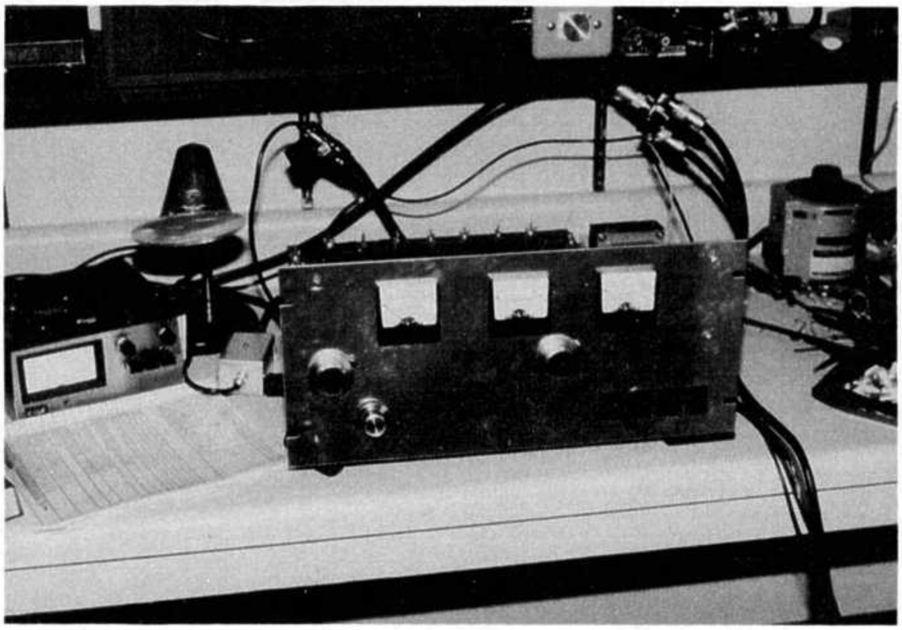

Coax/Trap TI-99/4A Computer Program in BASIC

By John S. Davis, WB4KOH
3929 #4 Winterfield Place,
Charlotte, NC 28205

This BASIC program was written to calculate the turns required for a coaxial-cable antenna trap. With data input, the program will supply the user with L, C, X_L and X_C information. The program itself is based on information given in two articles. The first was written by Robert C. Sommer, N4UU, and appeared in the December 1984 issue of *QST,* p 37 (Optimizing Coaxial-Cable Traps); the other was, "A Coax-Antenna Trap Program for the Timex/Sinclair 1000," by Andy S. Griffith, W4ULD, and appeared in the August 1984 issue of *QEX.*

```
100 REM  JOHN DAVIS WB4KOH KOH SOFTWARE CHARLOTTE NC
110 CALL SCREEN(6)
120 CALL CLEAR
130 FOR F=1 TO 12
140 CALL COLOR(F,16,6)
150 NEXT F
160 PRINT "This program will calculate the turns required for a    coax antenna
trap.          "
170 PRINT "It also gives L, C, XL & XC.From 'QEX' Aug. 1984 PP 8-11Org. by Griff
ith, W4ULD.       "
180 PRINT "Also see 'QST' Dec. 1984    page 37."
190 PRINT
200 PRINT "TI basic by J. Davis, WB4KOH       Dec. 5, 1984          "
210 INPUT "Press <ENTER> to go on. ":XX$
220 CALL CLEAR
230 REM  2939-4 WINTERFIELD PLACE CHARLOTTE NC 28205
240 PRINT "Cable and coil form data.    "
250 PRINT "Calculations include 1 inch tail inside coil.          -------------
------------------"
260 PRINT "cable    dia. cap/ft power"
270 PRINT "RG-174  0.105  30.8  <500   RG-58/U 0.200  28.5  1 KW   RG-59   0.242
  21.0  1.5 KW  "
280 PRINT " MHz.  min174opt min 58 opt  3.55  1.65 2.48 2.43 3.65   3.95  1.57 2
.35 2.32 3.49"
290 PRINT " 7.15  1.23 1.86 1.78 2.70  10.125 1.07 1.58 1.52 2.32  14.175 0.90 1
.37 1.30 2.00"
300 PRINT "21.225 0.75 1.14 1.08 1.66  28.85  0.64 1.00 0.94 1.45  -------------
------------------"
310 INPUT "Enter coax dia. (In)? ":CD
320 IF CD<=0 THEN 310
330 INPUT "Coax cap./ft.   (Pf)? ":CC
340 IF CC<1 THEN 330
350 INPUT "Coil form dia.  (In)? ":D
360 IF D<.1 THEN 350
370 INPUT "Operting Freq. (MHz)? ":F
380 IF F<.1 THEN 370
390 PRINT
400 A=D+CD
410 FOR N=1 TO 100
420 L=((A^2)*(N^2))/((18*A)+(40*N*CD))
430 PIA=3.14159
440 XL=2*PIA*F*L
450 C=(((A*PIA*N)+1)*CC)/12
460 XC=10^6/(2*PIA*F*C)
470 IF XL>=XC THEN 490
480 NEXT N
490 X=(N-1)*10
500 Y=(N+1)*10
510 FOR M=X TO Y
520 N1=M/10
530 L1=((A^2)*(N1^2))/((18*A)+(40*CD*N))
540 XL1=2*PIA*F*L1
550 C1=(((A*PIA*N1)+1)*CC)/12
560 XC1=10^6/(2*PIA*F*C1)
570 IF XL1>=XC1 THEN 590
580 NEXT M
590 PRINT "X1 (ohms) =";XL1
600 PRINT "Xc (ohms) =";XC1
610 PRINT "L  (uH.)  =";L1
620 PRINT "C  (pF.)  =";C1
630 PRINT "Turns no. =";N1
640 LIN=(PIA*A*N1)+1
650 PRINT "Tl legnth =";LIN
660 PRINT
670 INPUT "Press <R> to Redo                    <E> to Exit?  ":ZZ$
680 IF ZZ$="R" THEN 220
690 IF ZZ$="E" THEN 710
700 GOTO 670
710 CALL CLEAR
720 END
```

The CAD Experience

By Courtney Duncan, N5BF
Automations, PO Box 691023,
Houston, TX 77269-1023

I have been using a computerized drawing system for about one year. I wrote the program myself—its purpose is to simplify the process of generating and modifying schematic diagrams, but it has since been used to make mechanical drawings as well. In this article, I will describe the computer aided drawing system capabilities, and the hardware and software associated with it. Figs 1 and 2 are examples of system-generated diagrams.

Hardware and Software Requirements

Hardware requirements include an IBM® PC with 256 kbytes of RAM, a color monitor and an Okidata Microline 84 (15-inch carriage) printer. Other wide-carriage printers could be used as long as the printer is compatible with the Okidata dot addressable graphics format, otherwise the print driver will have to be rewritten. A hard disk system (PC-XT or equivalent) is not required, but speeds up the editing process.

The software needed is Laboratory Microsystems FORTH version 3.0 for MS/PC-DOS with the graphics extension. Unfortunately, this drawing system is not a standard FORTH-83 application, and therefore, will not compile under another standard FORTH-83 system. The FORTH version 3.0 and graphics extension packages are $100 each and are available from Laboratory Microsystems, Inc, PO Box 10430, Marina del Ray, CA 90295; tel 213-306-7412.

LMI also has a "symmetrical" version of FORTH for other computers. If they have a FORTH version 3.0 with a graphics driver for your computer, there is a good chance that the drawing system can be brought up under it.

System Capabilities

The system is able to draw the following symbols and marks: lines between any two points, circles of any radius (two standard sizes for wire markers plus user specified size option), fuses, jacks, resistors, transformers, capacitors (polarized or unpolarized), grounds (earth or chassis), inductors (air, iron core or windings), semiconductors (PNP, NPN, diodes, bridges), switches (toggle and push buttons), hinges (for user designed switches), logic symbols including "invert" (small circle), variable circuit elements,

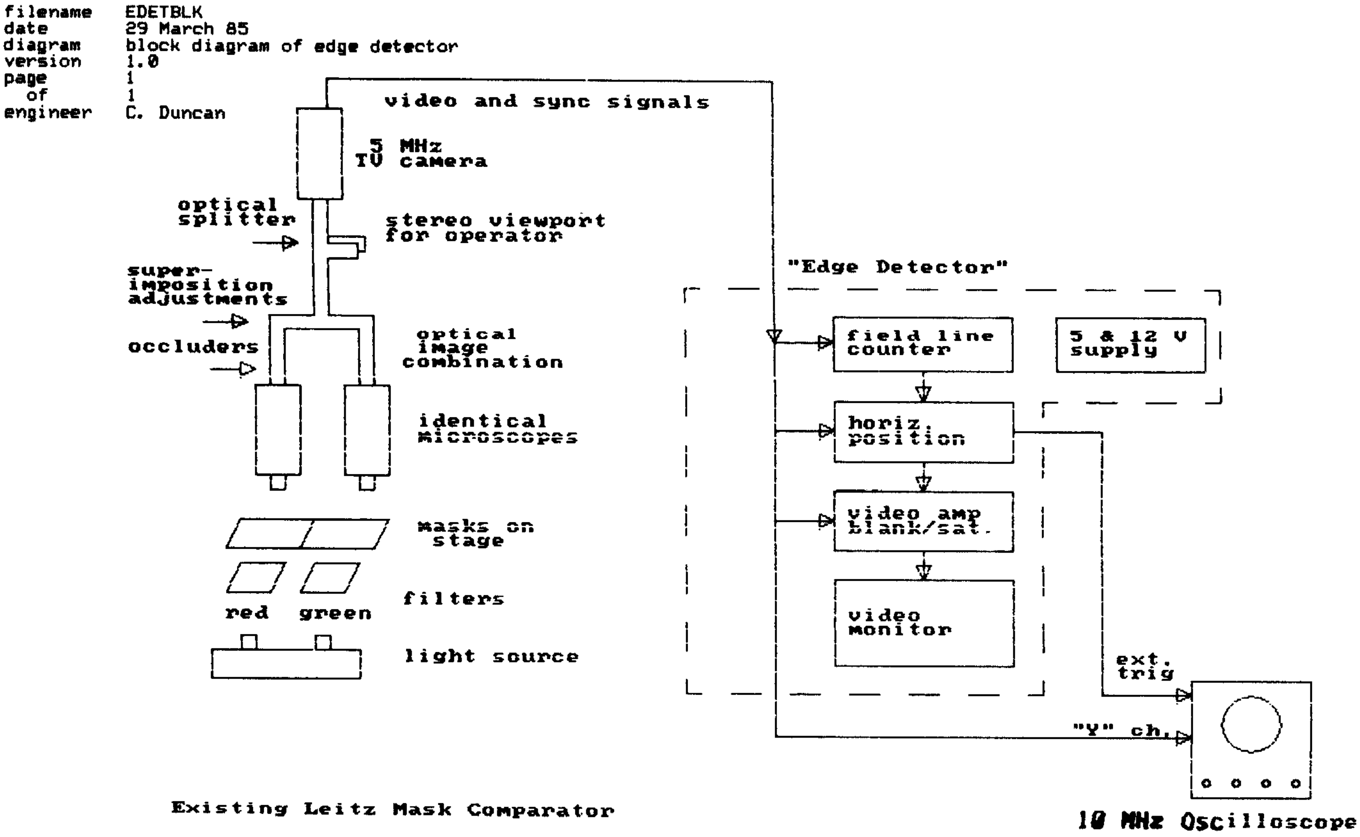

Fig 1—A block diagram of an installed edge detector. Here is an example of the various symbol formations that the CAD system will produce. The identification block appears in the upper left hand corner of the diagram.

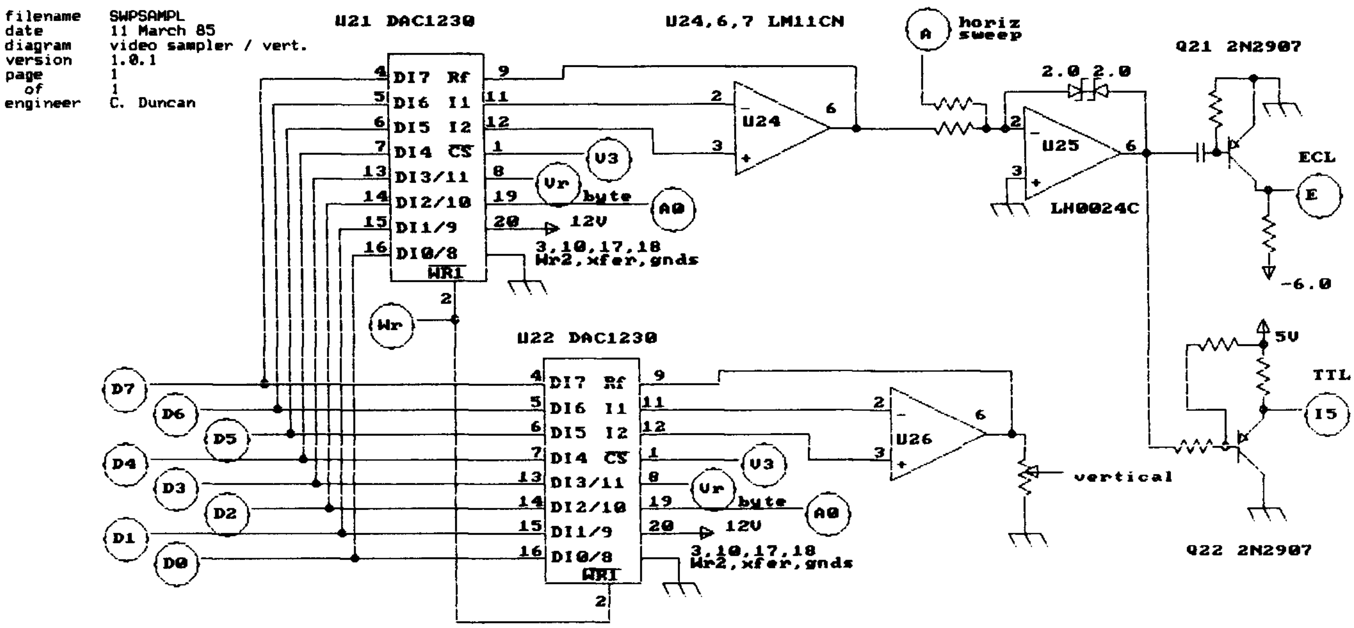

Fig 2—Another example of what LMI's software will create. This is a schematic diagram of a video sampler and vertical sweep generator.

arrows at 45- and 90-degree orientations, ICs of various sizes, and circuit-connection dots.

Symbols are also provided for drawing flowcharts (regular, decision diamond, and heading boxes). Text may be written in any of four directions: up, down, left or right, and includes any symbols available from the IBM keyboard. Only one font is available.

Provisions are made for drawing scale templates for board layouts. This includes pixel-to-inch conversion and scale rectangles representing many popular IC socket sizes.

Editing features include graphics cursor movement in selectable step sizes in the "insert" mode (leaves a line in the path of the cursor), or the "normal" mode (does not leave a line). Block operations include block erase, move, copy and recreate. Inverse video is available for all symbols and can also be used to erase symbols and created in the normal mode. All graphics are in two colors. The background remains black, but one of 16 system colors can be selected by the user for the foreground. There are no on-screen user helps, only a few pages of instructions and command lists.

Each drawing is displayed in its entirety on the monitor or printed on an 11- × 15-inch sheet of computer paper as an 800 × 600 pixel image with 72 pixels per inch in both axes. The IBM color monitor does not have this kind of resolution (it has 640 × 200 pixels), therefore, the image is degraded on the monitor. Symbols are easily identified, but text is usually impossible to read (in the printout, text is easy to read). Each drawing has a text ID section printed in the upper left hand corner of the page and is accessible from the editing system. This ID contains file name, date, drawing description, and other related information.

Drawings are stored on disk as a pair of files; one for the color monitor image and the other for the Okidata printout. The files are updated in parallel during editing with the Okidata version being the master image because of its greater resolution. Images may be saved or loaded at any time. Block recreate regenerates part of the monitor image from the master image. This often improves readability and uncovers errors.

Both files must be present for editing to be possible. A utility is provided for creating a monitor image file from a master image file. This and the print utility may run concurrently with editing as long as the image being printed or converted is different from the image being edited.

Conclusion

I will provide diskettes with the source code (ready for FORTH compiling) and instructions for a $25 handling fee. Or, a listing is available with instructions (about 26 pages) for $20, inclusive of shipping and handling. Requests about this program should be mailed to Automations at the address given earlier.

In April, Automations intends to release a commercial version of this software. It will have expanded capabilities, be much more user friendly, and will be available for a wider variety of computer/monitor/printer combinations. I would be interested to hear from anyone about what systems they would like to see supported.

Bits

Do You Speak My Language?

More often than not, foreign International Amateur Radio Union society journals cross paths with *QEX* editors. Good material about computer programs, microwave technology and other Amateur Radio related articles are frequently lost. Why? We have no translation for the article.

If you can read and write (translate) fluently in a foreign language, or know someone who can, *QEX* would be interested in hearing from you. Journals in German, Italian, Spanish and French are commonly seen. Remember, the IARU has over 100 member societies, thus, if you know Swedish, Danish, and Chinese or Japanese, we may be able to put you to work.—*KA1DYZ*

No-Modification HF Packet With the TAPR TNC-1 or Heath HD-4040

By John W. Gregory, W4QF
6495 Killian Dr, Miami, FL 33156

High-frequency packet is easily accomplished with the TNC-1 or Heath's HD-4040, without modification, by using the Florida Amateur Digital Communications Association (FADCA) modem kit.[1] Let me tell you how to do this in seven easy steps.

- Construct and align the FADCA kit. Follow the instruction manual for 300-baud, 200-Hz shift use.
- Locate J5 on the TNC board. All pins remain jumpered as they are except pins 1-2, 17-18 and 19-20. Heath has a plug available to fit J5 (part no. 134-1497; cost $14.40). If this plug is used, jumper all the pins as they were (on the cable attached to the Heath plug) except those pins previously mentioned. Wire the remaining leads to the switch as shown in Fig 1.
- Mount the 3PDT switch (RS no. 275-661) and the FADCA modem in a suitable box.
- See the switch wiring diagram in Fig 1. The switch selects either HF or VHF packet operation.
- With all units turned off, make the connections to J5, the transceivers and so on. Use the TNC PTT jack for PTT function.

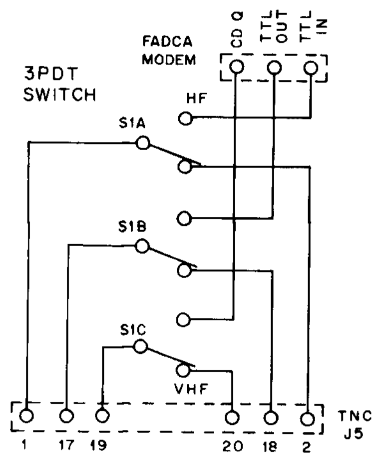

Fig 1—The switch wiring diagram. The switch is shown in the VHF position, but can also choose HF. Here, the three VHF pins shown are used in the modification (see text).

- For HF operation, power up the TNC and modem. Turn the switch to the HF position. Type "H 300." Initialize the TNC HDLC with a "C X" command, then a "D" disconnect.
- Many different Bell 103 tone pairs are currently in use on HF packet —1600/1800 (TAPR), 1070-1270 (FADCA modem), 2025-2225 (Kantronics), and others. It doesn't matter which tone pairs are used as long as the shift is correct (currently 200 Hz). Thus, all the operator has to do is offset the tuning to match incoming tones to TNC tones already in use. This is much easier than it sounds. For example, let's say we have a popular frequency of 14103; the FADCA modem tuning will be about 14101.4, LSB.

Of course, the easy way is to use some form of tuning indicator by adapting a unit such as the one described in the June 1984 issue of *Packet Status Register.*[2] HF packet is great fun. Hope to see you there!

Notes

[1] Available from FADCA, c/o designer Jerry Quimby, 2677 Hereford Rd, Melbourne, FL 32935. Cost is $8.95 ppd.

[2] *Packet Status Register Quarterly* is a membership newsletter published by the Tucson Amateur Packet Radio Corp (TAPR), PO Box 22888, Tucson, AZ 85734.

Bits

OSCAR Gateway: Chicago to the Coasts

The idea of using as little as 150 mW on 2 meters or 440 MHz to contact the east and west coasts from the Chicago area seems incredible until it you realize that this is all that is required to access the OSCAR Gateway. Through the Schaumburg, IL based Northwest Area Public Service (NAPS) repeater, N3CXQ, and the station of Paul Bocci, K9NO, twenty-one area hams were given the opportunity to experience satellite communications first hand.

At about 20:20 CST on November 7, 1985, the Gateway was activated and contact was made with Kingston, NH. The operator spoke with several hams using handhelds, mobile and base stations, and one amateur operating portable from his hospital bed. Later that evening, contact was established with Barnegat, NJ and Costa Mesa, CA.

A total of 21 local hams made OSCAR contacts during the two-hour Gateway operation. Because of the cross-band link of the NAPS repeater, operators were free to use either their 2-meter rigs or 440-MHz gear to access the system. Conversion to OSCAR was implemented by K9NO from the FM repeater to SSB for the satellite and back again at his home in Roselle, IL. Dick Beers, WD9IIC, AMSAT Coordinator for northern Illinois, acted as net control for the demonstration.

Many of the participants were new to OSCAR. All stations expressed interest in satellite communications and another Gateway operation took place in December with a contact in New Zealand.

There is still one problem nagging Chicago area stations—how will operators properly complete a QSL card?—*William H. Itter, N9EWA, Schaumburg Amateur Radio Club, PO Box 94251, Schaumburg, IL 60194.*

>50
Focus on technology above 50 MHz

By Bill Olson, W3HQT
Box 1655A, RFD 1
Burnham, ME 04922

RF Transistors: Inside the Package

Last month we dispelled a few myths about RF transistors. This month we'll take a look at what's inside a transistor package and see how transistors for low-frequency operation differ from those used at VHF and UHF.

Transistor Packages

To understand how a modern RF device works, we first have to understand the transistor package. There are many different types: 2, 3, 4 or 6 leads; stud or flange mount; ceramic, metal-ceramic or plastic. They all have their places, and we'll take a brief look at each type.

First, though, let's look at what the package is supposed to do. Remember that a bipolar chip is a little chunk of silicon about 3 to 5 mils (0.003 to 0.005 inch) thick. The base and emitter connections are on top; the collector is the back of the chip. The function of the package that contains the chip is threefold. First, the package must connect the chip to the outside world with an acceptably low amount of loss and parasitic reactance. Second, the package provides a way to get the heat out of the chip and into a heat sink or the air with an acceptable thermal resistance. Third, the package keeps the outside world (dirt, moisture, fingers) from getting into the transistor.

Coupled with the above factors is cost. Manufacturers usually use the cheapest package configuration that will give acceptable performance, so you can generally determine the frequency range of a device just by looking at the package! While there are many different transistor case styles, amateurs usually use types that fall into these categories:

- small-signal metal can and molded plastic types
- low-noise stripline receiving types
- stripline, opposed emitter (SOE) power types
- 6-lead internally matched (J0) power type
- microwave power types (usually 2-lead devices with the common connection being the case or flange)

Small-Signal Transistors

Most hams are familiar with transistors that have three or four wire

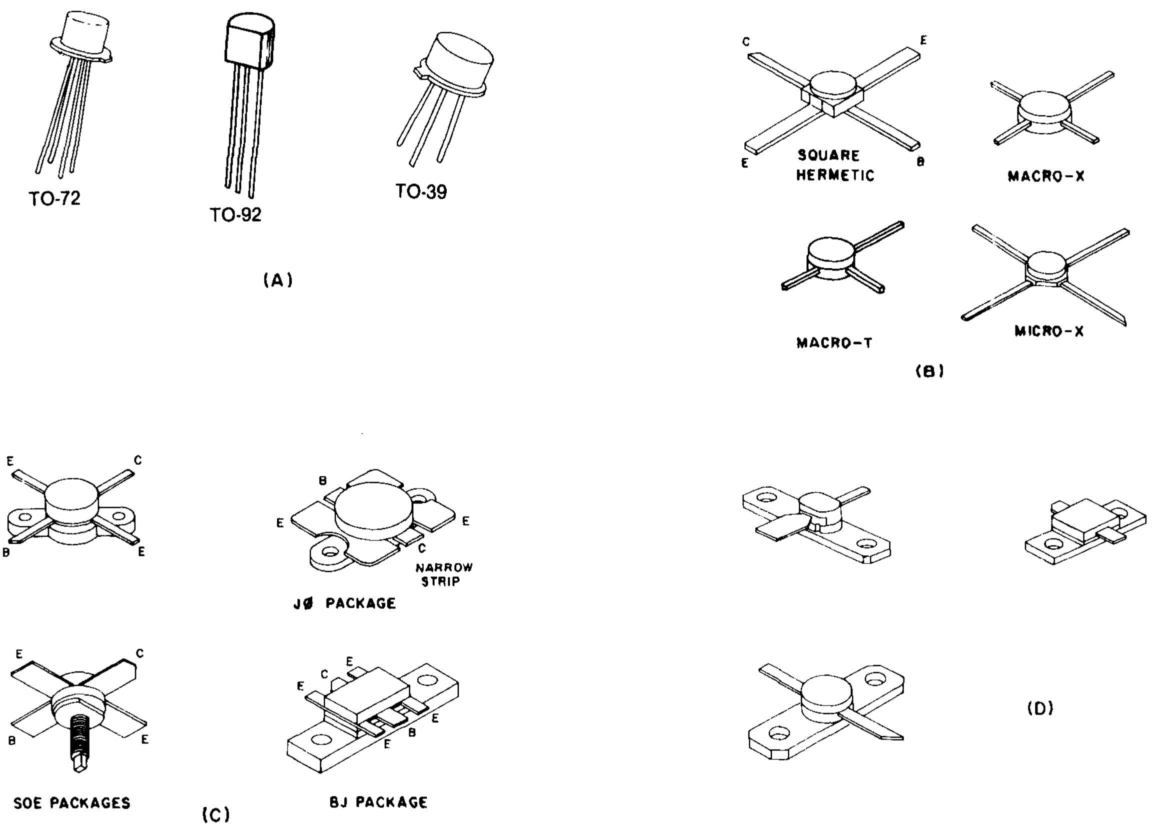

Fig 1—Transistors are available in all manner of packages. The types shown here are discussed in the text. Small-signal transistors are shown at A; stripline receiving devices are depicted at B; the packages at C are for stripline power devices; and microwave power devices are shown at D.

leads like those shown in Fig 1A. They come in "tin can" packages (TO-39, TO-72) and plastic types (TO92). These are inexpensive transistors, usually assembled and tested using high-volume automated techniques.

Small-signal devices usually run at low power; getting the heat out is not a serious problem. In the plastic types, the heat goes out the collector lead. The can itself is the heat radiator in the metal can types.

In TO-72 and most TO-39 transistors, the chip is mounted directly to the case either eutectically (a gold-tin soldering process) or with a conductive epoxy cement. See Fig 2A. This makes the can hot because it is electrically connected to the collector. The power that the device can dissipate is limited to whatever convection off the case will allow (usually a watt or so).

There is an alternative TO-39 configuration, usually called common-emitter or isolated-collector, where the chip is mounted on a beryllium-oxide (BeO) insulator that is in turn mounted on the case. See Fig 2B. This allows the collector to be wired to one of the insulated leads and the emitter to be wired to the case. Such case styles are handy for common-emitter circuit configurations. The case may be grounded, so that it can be soldered or clamped to the heat sink. In this way, power levels up to 4 or 5 watts are possible through the UHF range.

Plastic devices were developed mainly for high-volume applications. Assembly is completely automatic to keep costs down. These transistors are built in long strips of 20 or more where initially all the leads are connected together on assemblies called *lead frames*. See Fig 3. Strips of devices go through automatic machinery that mounts the chip, wires the connections and molds plastic around the end. The lead frame then goes through a trim die that lops off the excess metal and separates the three leads to create individual devices. Finished transistors are then automatically tested and marked. This process allows thousands of devices per hour to be fabricated in factories with very little human help. Plastic devices normally sell for a few cents each in million quantities.

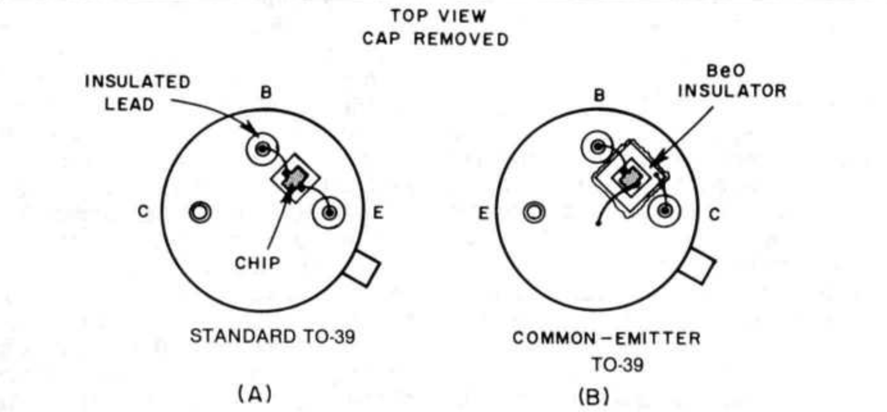

Fig 2—Two versions of the popular TO39 "tin can" package. The version at A has the collector tied to the case. The common-emitter version at B uses a beryllium oxide insulator to isolate the collector and case.

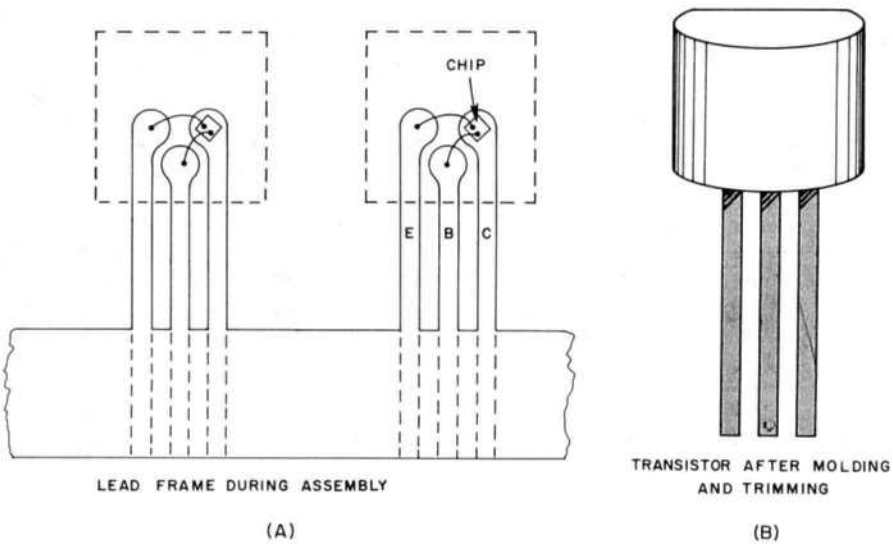

Fig. 3—TO-92 automated assembly. Lead frames are stamped out of copper sheet and tin plated. Molded plastic holds everything together after assembly.

Stripline Receiving Devices

Small-signal, low-noise, high-frequency transistors like those shown in Fig 1B are similar to metal-can and plastic types in that heat is usually not a problem. Heat dissipation from the leads and convection from the case are usually enough to keep the chip at an acceptable temperature. These devices are usually built in high volume by automatic machinery. The main difference between these devices and those in tin-can packages is that close attention is paid to keeping parasitic inductances and capacitances low to enhance low-noise and high-frequency operation.

The highest-performance packages of this type are metal-ceramic types usually referred to as *70-mil square hermetic* or *100-mil square hermetic*. These packages are usable in receiving applications at frequencies greater than 10 GHz. The popular Mitsubishi MGF-1402 GaAsFET is an example of a device that uses the square hermetic package. There is a lower-cost ceramic package, called a *Micro-X*, that is slightly lossier and has slightly higher lead inductance. Most low-cost, medium-performance devices come in these or similar packages—they're cheap to produce. An example of this type of transistor is the Mitsubishi MGF-1202.

The least-expensive package for low-noise receiving devices is made from plastic. These transistors are useful through at least 1296 MHz and are referred to as *Macro-T* (3 lead) and *Macro-X* (4 lead) packages. The MRF-901 is a popular Macro-X device. Since the plastic material is molded all around the chip and leads, there is a considerable amount of associated loss and shunt capacitance that limits high-frequency and low-noise performance. They are an excellent value, however, for amateur applications through the high UHF range. They are often used in low-level transmitting applications as well.

Stripline Power Devices

This category is a big one. It covers devices that operate from the HF region through 1500 MHz or so at power levels ranging from a few watts to several hundred watts. The transistor industry has pretty much adopted the stripline package as a standard, although you'll occasionally see other power-type packages such as the TO-60 and coaxial types. Typical stripline power packages are shown in Fig 1C.

With power transistors, a major consideration is getting the heat out of the chip while keeping lead inductances down to a manageable level. Since the collector of a bipolar transistor is normally the back of the chip, designers had to find a way of getting the heat out while maintaining electrical isolation between the collector and heat sink. Two materials that have the desired properties of low thermal resistance and high electrical resistance are diamond and beryllium oxide, a ceramic material. Diamond is too expensive for all but very special applications.

Transistors that we as hams would use have beryllium-oxide insulators between the chip and the heat-sink connection (a stud or flange). See Fig 4. This insulator is the heart of the transistor package. During the manufacturing process, each side of the beryllium-oxide insulator is metallized so that the transistor leads and flange (or stud) can be attached to it. This involves coating the insulator with several thin layers of metal. The final layer is usually gold. The metal on the top is screened on in a pattern with insulated areas where the leads attach. A metallized beryllium-oxide insulator can be thought of as a miniature, double-sided PC board with one important difference: it conducts heat very well.

Collector, base and emitter leads are usually attached to the metallized pads on the top of the insulator with a high-temperature braze. A flange (or stud) is brazed or soldered to the bottom of the insulator. The transistor chip is then mounted by a eutectic process to the collector area on the top. Connections from the chip to the emitter lead and base area are made with gold or aluminum wire. A machine called a wire bonder attaches the wire to the chip with either heat and compression or ultra sound and compression. More on this in the "chip" discussion in a later installment.

Since about 99 percent of all RF power applications ground the common lead (base or emitter, depending on design) for dc and RF, you might wonder: Why not attach the common lead directly to ground? One of the major users of power transistors—the mobile radio industry—has refused to go to a package with the common lead connected directly to ground because of a few special cases such as positive-ground vehicles. For this reason, the stripline packages that we're used to seeing have four or six leads protruding from the case. The common element (usually the emitter for frequencies up to about 800 MHz and the base above that) is brought out of the package on multiple leads, which are then grounded.

The low-frequency version of such packages has four leads; two emitter leads come out to the sides between the base and collector leads. Two emitter leads are needed for a good, low-inductance path between the chip emitter connection and ground. This package is normally called an *SOE package* (for stripline, opposed emitter). There are flange and stud configurations.

The diameter of the beryllium-oxide insulator varies from around 0.2 to 0.55 inch. While there is no reason why the manufacturer could not make the insulator larger from an electrical standpoint, there are mechanical considerations. There is a limit to the size of insulator that can be attached to a flange or stud. Since the flange is usually attached using a high-temperature braze, and the coefficient of thermal expansion of beryllium-oxide is different from that of the flange material (usually copper), larger braze areas usually cause the beryllium oxide (a brittle ceramic material) to crack during cooling. There are methods of overcoming this. One is to use a low-temperature solder to attach the flange to the beryllium oxide; the other is to use a flange or stud made from a metal with a coefficient of expansion closer to that of the beryllium oxide. This material is usually a copper-nickel alloy that is quite expensive and difficult to deal with from a manufacturing standpoint.

As we go up in frequency, package parasitics become more important. Lead inductance, as well as the capacitance between the leads and ground, start limiting the gain and efficiency of the device. These parameters affect the ability to use the device in broadband applications as well. Luckily this is not an important consideration for hams. For these reasons, transistor packages get smaller at higher frequencies. Ideally, we would want the chip to be wired directly to the circuit without an intervening package. In super-high frequency devices this is actually done, but packaged devices are used at most of the frequencies hams are concerned with. Nevertheless, transistors designed for use above about 800 MHz are proportioned differently from low-frequency devices. The chips get long

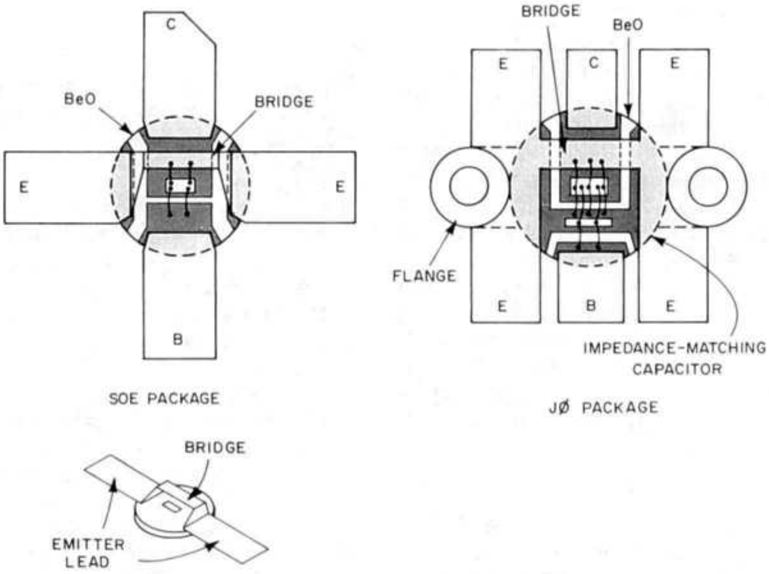

Fig 4—Standard stripline packages. Shaded area is gold screened onto the beryllium-oxide insulator. The emitter leads are usually stamped from a single piece of material that is formed in such a way that it bridges the collector metallization. In these packages, the emitter is isolated from the stud or flange.

and skinny, and the packages are more of a rectangular shape. This is done to make the distance between input and output as small as possible.

In addition, we start to see transistors that contain some impedance-matching right inside the package—usually in the form of a shunt capacitance. Six-lead (called J0) packages are of this type. The *J0 package* was developed at TRW and gets its name from the fact that the internal shunt matching capacitor on the input brings the input impedance down to a real number (to where the J reactive term is zero). This provides a higher input impedance and allows the use of a lower-Q input network, which has lower losses than the standard configuration. Consequently the transistor will have higher gain than its non-matched counterpart.

The 1/2-inch diameter, round, 6-lead devices used in most amateur high-power VHF and UHF power amplifiers are of the J0 variety and contain internal input matching. The package has 4 emitter leads to keep common lead inductance at a minimum. Above 800 MHz, we start to see another version of the J0 package that is rectangular and measures 0.230 × 0.360 inch. This is sometimes known as a BJ, or 900-MHz, package.

Microwave Power Devices

Above 1 GHz, the inductance introduced by separate common leads forces the device manufacturers to do away with leads for the common element. Lead inductance degrades gain, efficiency and bandwidth at higher frequencies. The common connection is made directly to the flange, so there are only two leads. See Fig 1D. In this package, the chip is surrounded by common-lead metal so that the base (or emitter) connections can be as short as possible. See Fig 5. The entire top of the insulator is metallized, and there are small insulated pads for the collector and input (emitter or base) leads. There is also a small insulated island where the chip is attached. The rest of the metallization on the top is electrically connected to the metallization on the bottom of the beryllium oxide. The connection between the top and bottom surfaces is usually accomplished by metallizing the edges of the insulator as well as the top and bottom. One manufacturer actually uses plated-through holes in the insulator to realize the shortest path to ground.

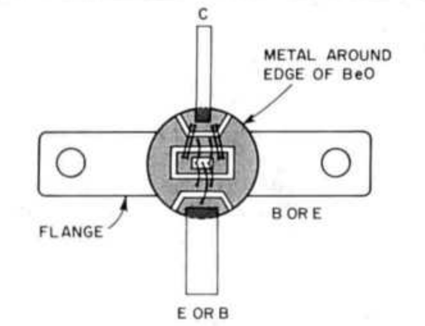

Fig 5—Unmatched microwave package. The collector island is surrounded by ground-plane metallization so the common element can be wired (usually with "double-stitch" bonds) to ground with the shortest possible lead length.

In the majority of microwave transistors, the chip sits on a metallized island in the middle of the beryllium oxide. Common lead wires attach directly to the sea of metallized beryllium oxide that is connected to the bottom of the insulator. The collector connection is made with wires bonded from the collector island to the collector lead, and the input connection is made with wires bonded from the chip to the input lead.

Often, input matching is built into a microwave transistor to bring the terminal impedances close to a real number and closer to 50 ohms. Output matching is sometimes used as well. Since the required inductances and capacitances are so small, it is often possible to transform the impedance all the way up to 50 ohms using internal matching, especially on devices for use above 1.5 GHz at power levels below 6 or 8 watts. Internal matching is done at a specific frequency range, so devices of this type are inherently narrow band. Unfortunately, the usable frequency range is often not even near a ham band.

Unmatched, broadband microwave devices exist as well. Often characterized from dc to daylight, such devices are simply a chip mounted in the smallest possible package with the shortest possible interconnecting wires.

Power GaAsFETs

One other package configuration worth mentioning is used for power GaAsFETs. These devices are used at frequencies starting at about 2 GHz and extending to 20 GHz and beyond. In an FET, all the connections are on the top of the chip; the back is electrically insulated from the device. Since gallium arsenide is not a particularly good thermal conductor, and since the heat builds up in the source connection, manufacturers use a method known as *flip chip* mounting. See Fig 6. In this case the package has a small pedestal sticking up from the flange or case. After the gate and drain wires are attached to the chip, the chip is "flipped"over, and the source connection is soldered to the pedestal. The input and output wires are then attached to the package leads. Heat can conduct out of the chip, and package parasitics are kept to a minimum.

Some Final Thoughts

One more reason for the proliferation of different package styles is the users' varying requirement for hermeticity. To be truly hermetic, a package must be all metal and ceramic, with the lid soldered on. Hermetic devices are used in very harsh environments like satellites, missles and some communications applications where the equipment is exposed to the elements.

For less stringent applications, such as mobile radio and other commercial uses, a cheaper package can be used where the lid or cap is glued on with an epoxy cement. While a small amount of moisture can eventually penetrate the epoxy, these devices are fine for ham use. There are a few manufacturers that make medium power devices in a molded plastic package, with a stud. While these devices normally exhibit lower gain than their standard counterparts, they are an excellent value. The NEC 20 package is an example of this technology. It is used for devices characterized up through 2.3 GHz.

One last note on transistor packaging. Manufacturers usually trim one of the leads on a stripline package to indicate either the input or the output. Generally, US and European manufacturers mark the collector of the device by cutting an angle on the lead or making it a different width. For some reason, the Japanese have decided to mark the *input* lead. This can make things pretty confusing, especially when working with very small devices such as GaAsFETs. Be sure to consult the manufacturer's spec sheet when installing an unfamiliar device, or you may be in for an unpleasant surprise!

Next month: Chips—Silicon and Gallium Arsenide.

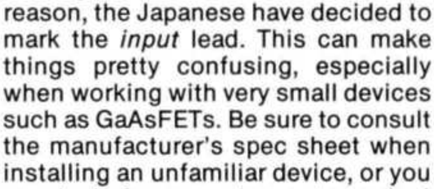

Fig 6—"Flip chip" power GaAsFET package.

Intellectual Properties

By Bill Conwell, K2PO
16th Floor, Willamette Center,
121 SW Salmon St,
Portland, OR 97204

Patents

Amateur Radio operators have long been experimenters. From spark gap to packet, developments in a wide range of technologies can be attributed to their part-time work; amateurs routinely use and develop "intellectual properties." Often, however, the legal aspects of their work are overlooked. This column will serve as a forum to discuss amateur-related intellectual properties and the forms of legal protection available to protect them.

Intellectual properties is a legal term for creative products of the mind (i.e., ideas and concepts), that are embodied in tangible form. Familiar examples include electrical designs (circuits and antennas), techniques (measurement, modulation and transmission) and computer software. The government offers three forms of protection for such intellectual properties to encourage their development.

- Patents are used to protect innovative articles and methods for a period of seventeen years. The above-mentioned electrical designs and techniques are examples.
- Copyrights are used to protect original works of authorship, such as books and computer software. The duration of a copyright is much longer than that of a patent. One copyrighted item familiar to most experimenters is the Smith Chart, created by Dr. Phillip Smith in the 1930s. It is still protected by copyright.
- Trademarks are used to protect commercial symbols or names, such as *QST* for magazines and Larsen for antennas. Trademarks endure as long as they are used.

The Semiconductor Chip Protection Act is a fourth type that has recently become available. It is used to protect the three-dimensional representation of patterns that are used in forming multilayer integrated circuits.

Of these intellectual properties, patents and copyrights are of the most interest to experimenters. This month's column will provide some basic background information on patents.

How to Obtain a Patent

A patent is a government-granted-seventeen-year monopoly on making, using or selling an article or process. In exchange for this right, the inventor must disclose the details of his or her invention to the public. By this system, inventors are encouraged to publicize the results of their research so that others may benefit from it.

There are three basic requirements to obtain a patent. The invention must be novel, utilitarian and nonobvious. For an invention to be considered novel, it must be new. A patent will not be granted on any item not newly developed in the technological area in which it serves. A new invention is usually conceived when a need evolves to perform a task in a simpler way. Thus, utility means that the device should not be useless, but serve a specific purpose to make that task simpler and more efficient. And, to meet the nonobvious requirement, the invention, when made, must not have been obvious "to one skilled in the art."

The obviousness requirement is sometimes difficult to evaluate because virtually all inventions are combinations of old elements or steps. Let's look at an example. A newly developed electrical circuit is conceived, but its component parts (resistors, capacitors, and so forth) have been available for decades. The question of patentability, then, often becomes "would it have been obvious to one skilled in the art to combine the old components in the manner done by the inventor." As might be expected, the answer is more often "maybe" than it is "yes" or "no." Much of the two years or so during which a patent application is pending at the Patent Office is spent arguing this question with the Patent Examiner. (The Patent Office has about 1,400 examiners, each specializing in a narrow field of technology.)

A fourth criterion not widely known for patentability is that an invention cannot be patented in the US if it has been described in a printed publication or offered for sale more than one year before a patent application is filed. Even more strict are the requirements in most foreign countries, in which a patent application must be filed somewhere (such as in the United States Patent Office) before any publication or offer for sale is made.

If the above requirements are met, a US patent can be obtained. However, it should be recognized that a patent does not grant the owner the right to make the invention. Instead, it only grants him or her the right to prevent others from making it. (The invention may incorporate someone else's prior invention that cannot be used without the prior inventor's permission.)

After Issuance

An issued patent contains three main parts: the drawings, the description and the claims. The drawings and the description give the practical details of the device. The claims are the legalistic jargon that define precisely how much of the device is actually protected by the patent.

Each week the Patent Office publishes the *Official Gazette,* a book about an inch thick, containing one drawing and one claim from every patent issued that week. Of the approximately 1500 patents listed in each issue, about 300 are for electrical inventions. (More than half of the electrical patents are typically issued to foreign inventors and corporations.) Collections of the *Official Gazette* can be found in technical libraries, such as at major universities, throughout the country. Most of those libraries also have full text copies of patents on microfilm.

A brief scan of computerized patent data bases shows that several Amateur Radio manufacturers, such as Butternut, Collins, Heathkit, ICOM, Larsen, Telex Communications (formerly Hy-Gain), and Yaesu, presently rely on patents to protect their innovations. The number of such manufacturers is likely to increase soon because of the growing importance of patents.

In the past, a patent was merely an invitation to an expensive lawsuit. Courts frequently invalidated patents and left a patent owner who sought to enforce his patent worse off than when he started. (The frustration experienced by Major Edwin H. Armstrong, the inventor of frequency modulation, in litigating his patents is said to have contributed to his suicide.) Recently, however, Congress has acted to remedy this situation by forming a court in Washington to which all appeals in patent cases are taken. Suddenly patents have become a very effective competitive tool. The recent case of Kodak v Polaroid is an example of what has been happening. The court ruling removed Kodak from participating in the instant-photography business. This trend will likely cause more manufacturers to protect their innovations under the patent law.

Conclusion

The information presented in this column is, of course, very general and should not be relied on as legal advice. Each fact situation is different and all rules have their exceptions. Nonetheless, it is helpful for experimenters to have a general familiarity with the legal protection available to technical innovations. Future columns will discuss some of the other details of intellectual properties and will report on developments relating to Amateur Radio in this field.

QEX welcomes the bimonthly column "Intellectual Properties," in this issue by Bill Conwell, K2PO. Bill is a past contributor of QEX articles and will not only continue giving us a peek at new patents, but will explore patent, trademark and copyright processes of interest to Amateur Radio experimenters.

Bill earned his Novice class license in 1971 at the age of 12, and upgraded to Extra at age 16. He received a BSEE at Georgia Tech and worked for RCA and Radio Free Europe. He later attended Emory University in Atlanta where he earned his law degree. He now works as a patent attorney in Portland at Klarquist, Sparkman, Campbell, Leigh and Whinston. Previous calls held include WN2APO and WB2APO. His favorite ham activities are contesting. QRP CW and antenna experimentation.—W4RI

Bits

Annie Now Available For IBM and Compatibles

During 1984, readers of QST were graced with a 5-part article written by James C. Rautio, AJ3K.[1] His material focused on the operation of different types of antennas over various types of ground. His program, originally written for the Apple® *//e* computer and later converted to a C64 version, calculates horizontal and vertical ground reflections and produces a radiation pattern.

Recently, the Annie program has made its debut for the IBM® and compatible systems. Sonnet Software Products was kind enough to supply *QEX* the following information:

Annie for the:	
Commodore 64™	$ 39.95
Apple II series (48k or more memory)	49.95
IBM® PC (128k plus color card required)	49.95
IBM PC with 8087 co-processor	170.00

An antenna radiation pattern, calculated by Annie, is displayed on an Apple *//e* system.

The IBM PC version with the 8087 co-processor (co-processor not supplied) is about eight times faster. Both IBM versions allow the user to modify the forms used for data input.

A group-purchase discount is available. Get together with your friends, order three or more copies of Annie and take 1/3 off the total price. Order six or more and pay 1/2 price. Mix and match any version of Annie listed above. Be sure to include the name (and call, if desired) of each customer because each copy of Annie is personalized. There are larger discounts for educational institutions.

MiniNEC—Written at the Naval Ocean Systems Center, San Diego, this public-domain program should be in every ham's software library. MiniNEC uses the "Method of Moments" to analyze any wire antenna. It calculates the input impedance and current distribution as well as the radiation pattern. While lossy ground cannot be included, a perfect ground can be analyzed. Calculation can take several hours and there are no graphics. If you know someone who has a copy, by all means, get a copy from them. If you don't, we can provide copies of MiniNEC on disk for the C64, Apple II and IBM PC (in BASIC) for $5 each. Copies of the 56-page manual (needed to use MiniNEC) are $10 each. Once you get MiniNEC, be sure to pass out copies and spread the good news!

Quoted prices include postage within the US and Canada. New York residents add sales tax. Group discount orders be sure to include everyone's name.

Notes

[1] Rautio, James C., AJ3K, "The Effect of Real Ground on Antennas," *QST*, Part 1—p 15, Feb; Part 2—p 34, April; Part 3—p 30, June; Part 4—p 31, Aug; Part 5—p 35, Nov; Feedback, p 47, March.