Contents

November 2024

Regulars

Technical Features

Reviews

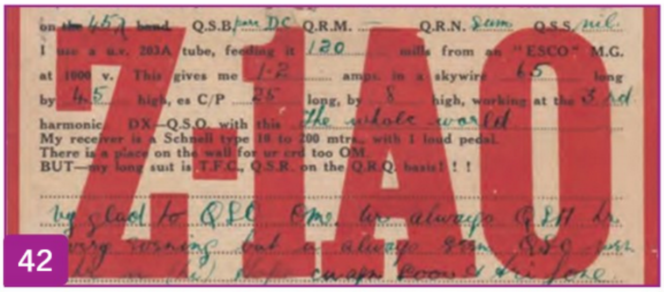

on the 45λ band Q.S.B. pure DC Q.R.M. — Q.R.N. Some Q.S.S. nil.
I use a u.v. 203A tube, feeding it 120 mills from an "ESCO" M.G. at 1000 v. This gives me 1.2 amps. in a skywire 65 long by 45 high, es C/P 25 long, by 8 high, working at the 3rd harmonic. DX—Q.S.O. with this the whole world
My receiver is a Schnell type 10 to 200 mtrs., with 1 loud pedal.
There is a place on the wall for ur crd too OM.
BUT—my long suit is T.F.C., Q.S.R. on the Q.R.Q. basis! ! !
vy glad to QSO OM. [illegible] always [illegible]

42

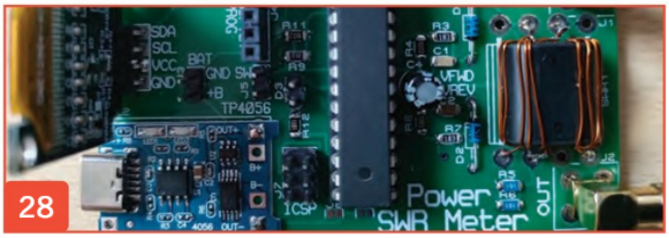

28

News and Reports

Features

Xiegu X6200 review
Cover design by Kevin Williams, M6CYB

RadCom THE RADIO SOCIETY OF GREAT BRITAIN'S MEMBERS' MAGAZINE
Managing Editor: Edward O'Neill, M0TZX, edward.oneill@rsgb.org.uk
Technical Editor: Peter Duffett-Smith, GM3XJE
Layout and Design: Kevin Williams, M6CYB, kevin.williams@rsgb.org.uk

All contributions and correspondence concerning *RadCom* should be emailed to: radcom@rsgb.org.uk. Alternatively by post to *RadCom* Editor, 3 Abbey Court, Fraser Road, Priory Business Park, Bedford MK44 3WH Phone 01234 832 700.

RadCom is published by the Radio Society of Great Britain as its official journal and is sent free and post paid to all Members of the Society. **The December 2024 edition of *RadCom* is expected to arrive with most Members by 15 November 2024** although this can take up to a week longer in some cases; international deliveries can take longer still.

All material in *RadCom* is subject to editing for length, clarity, style, punctuation, grammar, legality & taste. Articles for *RadCom* are accepted on the strict understanding that they are previously unpublished and not currently on offer to any other publication. Unless otherwise indicated the RSGB has purchased all rights to published articles. No responsibility can be assumed for the return of unsolicited material. See www.rsgb.org/radcompix for info on taking photos for publication.

The online *RadCom* is at www.rsgb.org/radcom/
RadCom Plus is available to RSGB Members online at www.rsgb.org/radcom-plus
RadCom Basics for Members new to the hobby can be found at www.rsgb.org/radcom-basics/
Abbreviations and acronyms we use are listed at http://tinyurl.com/RC-acronyms

RADCOM (ISSN No: 1367-1499) is published monthly by the Radio Society of Great Britain and is distributed in the USA by RRD/Spatial, 1250 Valley Brook Ave, Lyndhurst NJ 07071. Periodicals postage pending paid at So Hackensack NJ. POSTMASTER: end address changes to RADCOM c/o RRD, 1250 Valley Brook Ave, Lyndhurst NJ 07071

facebook.com/theRSGB
@theRSGB

New Products

Samlex desktop switching power supply, model SEC-1235P-M

The Samlex SEC-1235P-M is destined to become the premier lightweight 13.8VDC desktop power supply, offering updated features and upgraded performance and ratings. Universal input of 100 to 240VAC, 50/60Hz, provides the ultimate international flexibility in an attractive package, including switchable backlighting of separate ampere and volt meters, 30A continuous, 36A peak capability and average efficiency over 89%. Output ripple and noise is limited to just 100mV peak to peak at full load. The time delay fuse is 6.3A, 250V, 5mm x 20mm. Your equipment is protected by built-in safety features including overload and short circuit protection, output over-voltage protection and over-temperature protection. This model is internally adjustable over the 12.5 to 15.0VDC range and is capable of operating in ambient temperatures from -20 to +50°C (-4 to +122°F). The cooling fan only operates when necessary. Weighing only 1.7kg (3.8lb), this is the supply that is easy to move or to take along to run your equipment in almost any conditions.

Samlex circuit innovations minimise output voltage ripple and RF. Long gone are the days of RF noise producing switching supplies. Samlex advanced switch-mode technology DC power supplies provide reliable power with a minimum weight and size. They produce clean, reliable power and are extremely well filtered to suppress unwanted noise and RFI, and are specifically designed for use with land mobile radios and for amateur radios. Samlex power supplies are also used by thousands of hobbyists, electronics students and professionals, as well as in broadcasting, industrial and commercial applications.

Available from Martyn Lynch and Sons for £174.95. See hamradio.co.uk for more information.

KC-4 Four-band vertical antenna for the 40, 20, 15 and 10m bands

The KC-4 is a robust, four-band vertical antenna designed for base station use, supporting up to 1000W PEP. Covering the 40, 20, 15 and 10m bands, it delivers reliable performance without the need for ground radials. Standing at 7.8m tall and weighing 7kg, the KC-4 is easy to install with the included mounting clamps and features a UHF female SO-239 feedline connection.

Available from Martyn Lynch and Sons for for £298. See hamradio.co.uk for more information.

New from M0CVO Antennas

M0CVO Antennas now has two new products – the CX-1 Coax Switch and the PH-1 Phono Switch.

The M0CVO Antennas CX-1 Coax Switch is used to switch between two antennas fed from a single radio or two radios fed from a single antenna. The connections are all SO239 UHF-type connectors.

The M0CVO Antennas PH-1 Phono Switch is used to switch between two phono outputs from a common source. This can be from either RF, audio or low-power voltage sources. So, it could be used for switching QRP antennas, amplifier keying/PTT circuits etc.

Both products are available from m0cvoantennas.co.uk/BKSStore

Anytone AT-6666PRO 10m band mobile transceiver

This new Pro version of the Anytone AT6666 builds from the popular design with increased power output, noise reduction technology, programmable mic button, and Tx bandwidth settings. The AT6666 Pro boasts 80W (PEP) on AM/SSB, and 50W on FM. The original version had 60W on AM/SSB and 45W on FM. The built-in noise reduction function works on both receive and transmit to clean up any static or interference.

Specification

- Frequency range: 28.000-29.700MHz (programmable)
- Channel: 40 channels (programmable) in each band
- Frequency control: phase-locked-loop synthesizer
- Frequency Step: 10Hz, 100Hz, 1kHz, 5kHz, 10kHz, 100kHz, 1MHz
- Frequency tolerance: ±5.0ppm
- Microphone: with push-to-talk /UP/DN and coiled cord
- Input voltage: DC 13.8V normal
- Dimensions: 252x158x48mm
- Weight: 1.27kg
- Antenna connection: UHF SO239
- Temperature Range: 20 to 50°C

The product is available at moonrakeronline.com for £249.95

Antennas

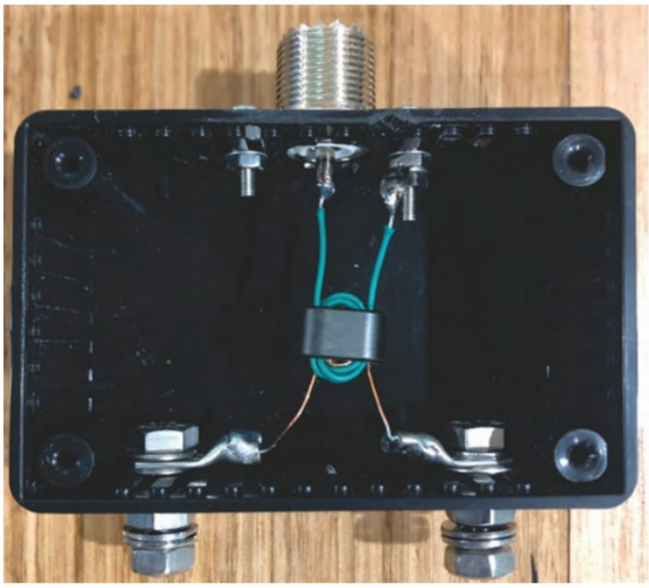

FIGURE 1: VK6LW version of the KK5JY/W8JI isolation transformer used on each DLPNG loop.

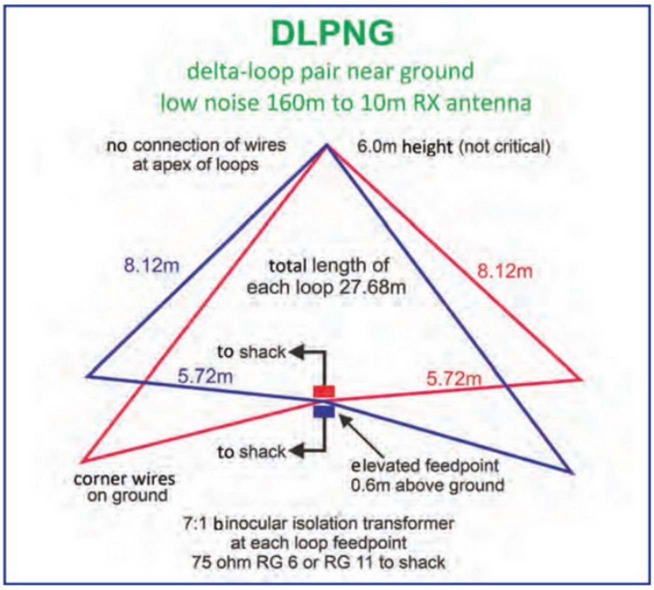

FIGURE 2: The DLPNG, two non-resonant delta-loops at right-angles to each other.

Once upon a time, back in the 1960s when the world was a simpler place and Dr Who first appeared on TV screens, the HF bands in the UK were relatively-quiet places. Even down on 160m, there was only the reassuring sound of the family black-and-white TV's time-base drifting gently across our receiver pass bands.

Today, with the apparently non-existent screening of digital telephone modems, switch-mode power supplies, and roof-top solar inverters, wherever you live in the UK the frequencies up to 30MHz sound like an audible nightmare dreamed up in the BBC's Radiophonic Workshop.

Separate antennas

During the early 1990s, in the semi-rural Darling Ranges of Western Australia, we watched our ambient noise levels creep up and blanket the weaker DX signals we chased. As a result both of us started to experiment with separate receive antennas. All receive antennas have one goal: to improve the signal-to-noise ratio (SNR) of received signals in comparison to those of the conventional antennas used for both transmission and reception. They are 'lossy' and not intended to boost the level of signals being received, but instead to reduce the level of noise being received in relation to that of the signals. An excellent overview of receiving antennas and their construction is given in ON4UN's famous book 'Low Band DXing' **[1]**.

Steve can still recall one of Kevin's first successes with a receive antenna: a many-turn wire loop on a wooden frame tuned to 1825kHz with a capacitor, and fed with 50Ω coaxial cable. This was mounted on one of his property's gate posts, so as to be as far away as possible from nearby houses and orientated side-on to the summer thunder, rolling down from the tropical Kimberley region. It looked like something the first Dr Who would have used to fight the Daleks and worked very well.

Since then we have collectively gone through Beverage antennas (short ones, terminated and un-terminated), 'Beverages on ground' (BoG) (very short ones, which can be shorter than conventional Beverages owing to their proximity to ground), and just about every type of small terminated loop antenna (Pennant, Flag, EWE, etc). All worked, but the Beverage variants generally took up too much room and were hard to run in the optimum directions, while the small terminated loops were very dependent on good ground conductivity, had too much signal loss (-25dBi to -40dBi), and only worked over part of the HF spectrum.

Both of us ended up using BoGs, as these were easy-to-put-down and easy-to-take-up and gave relatively-good output and improvement in SNR over our usual transmit/receive antennas, despite (or perhaps because of) the rocky outcrops we live on. Steve discovered that a BoG, made of 30m of shorted RG-59 TV coaxial cable, fed via a KD9SV BoG transformer **[2]** and terminated with a 200Ω resistor, running towards the USA like a snake, proved a very useful and simple 40m receiving antenna in terms of improving SNR on signals from there in comparison to his usual doublet antenna. Summing up, the BoG made working low-band DX in our noisy, thundery, static-filled summer bearable.

About 18 months ago, Kevin was exchanging emails with his Canadian friend Steve, VE6WZ. Steve is a well-known 160m DXer and had mounted his BoGs on a series of logs, which meant they were much easier to maintain and didn't get eaten or trampled on by moose and other Canadian critters. This neat solution inspired Kevin to think about receiving antennas again, and sparked his discovery on the web of a 'loop on ground' (LoG).

Steve Ireland, VK6VZ/G3ZZD, and Kevin Smith, VK6LW/VK6T/ ex-G4EHF
stevevk6vz@tpg.com.au

LoGs and beyond

The LoG was conceived by Matt Roberts, KK5JY, and described by him in an excellent web article about eight years ago **[3]**. Matt had been experimenting with various forms of loop receiving antennas for some time and the LoG resulted from this work. The output of the original LoG ranged from about -42dBi on 160m to -25dBi on 40m, potentially requiring the use of an external pre-amplifier on the low-bands.

The LoG is one of the latest incarnations of receiving antennas that stem from Harold H. Beverage and his namesake long-wire antenna, which he invented back in 1921. In practical terms, what Beverage discovered experimentally was by placing an antenna on, or very close to, the ground, the loss of atmospheric/man-made noise picked up on this antenna was greater than the loss present on the desired signal. In other words, the ratio of the signal in comparison to the noise improved, making the signal more easily readable. While laying the antenna on the ground meant it was more 'lossy' than if it was in the air, this gave a better SNR. As Kevin puts it, this approach effectively gives us 'something for nothing'.

Australian Steve, VK6VZ, had heard of the LoG when Matt first wrote about it, but never got around to trying one. He was thus delighted when the more energetic Kevin informed him earlier this year he was now experimenting with larger versions of the LoG antenna, which gave much bigger signal outputs but still had excellent

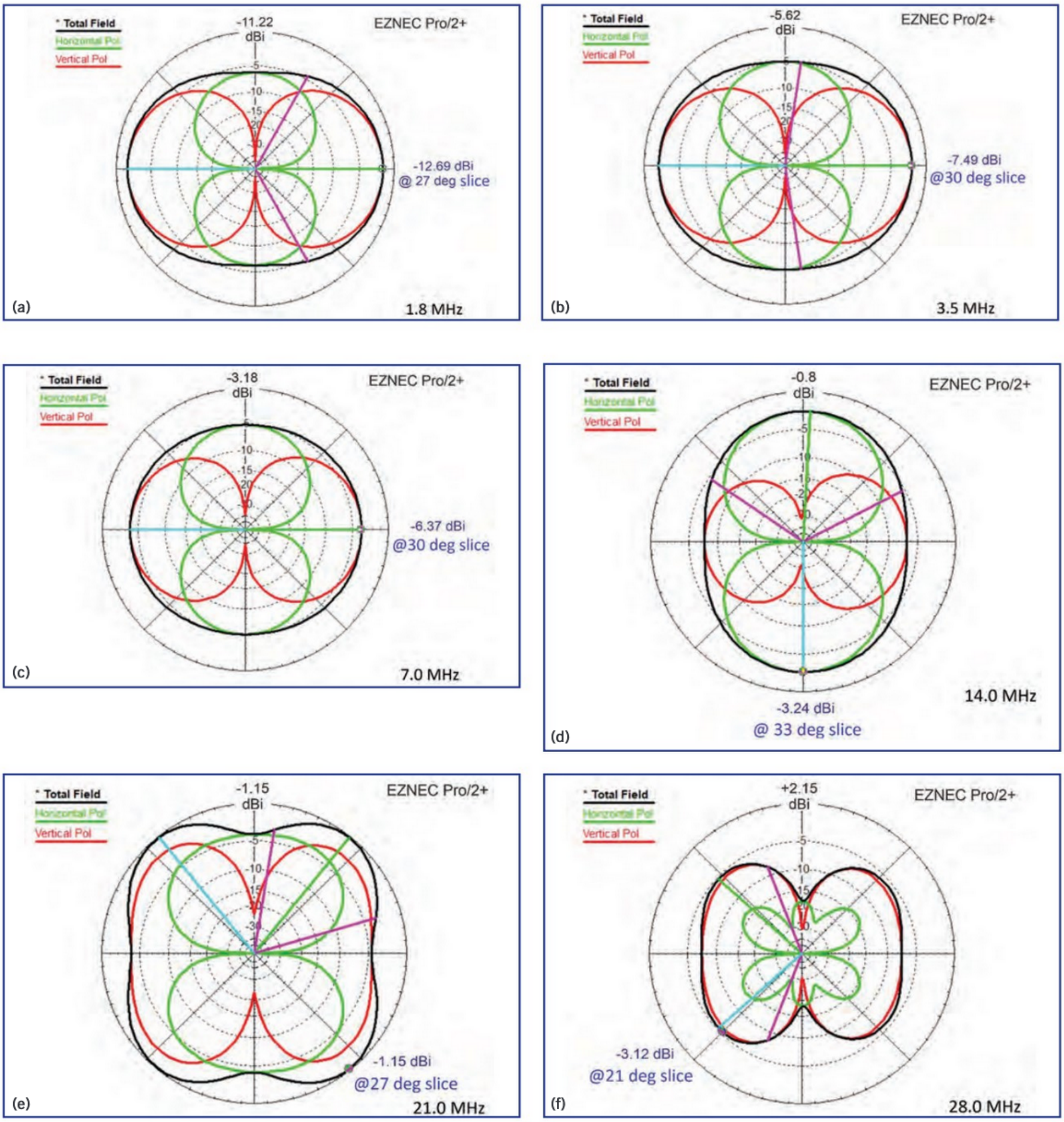

FIGURE 3: The azimuth far-field patterns of a single DLPNG loop at (a) 160m, (b) 80m, (c) 40m, (d) 20m, (e) 15m, and (f) 10m.

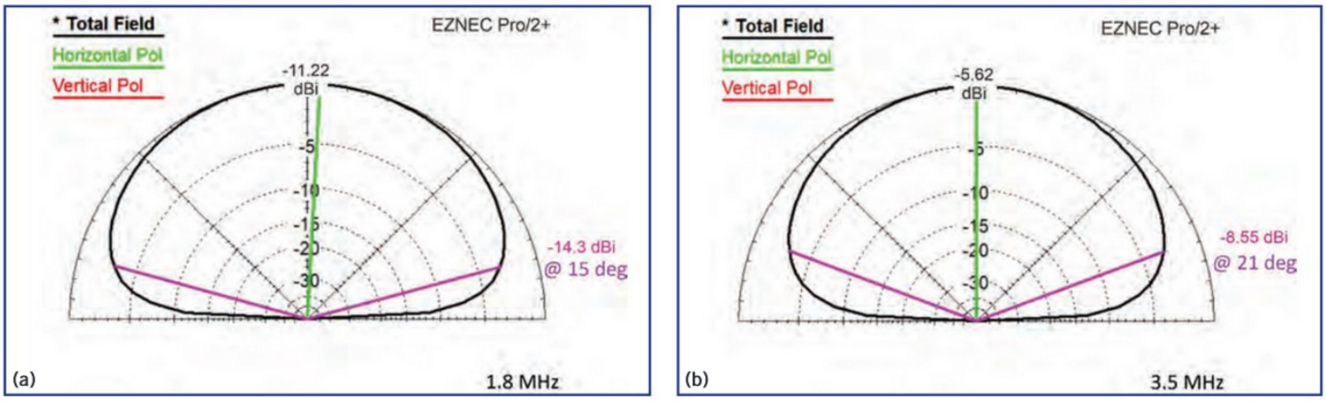

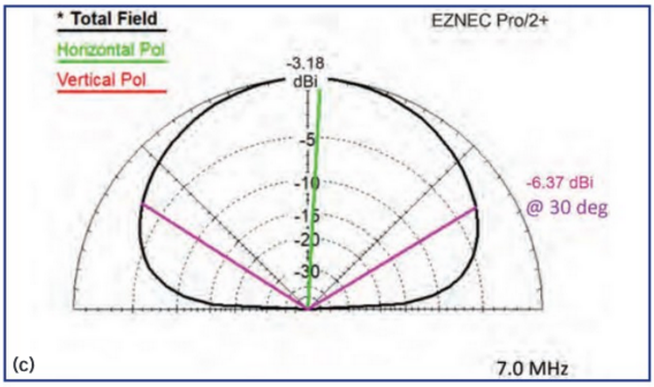

FIGURE 4: The elevation patterns of a single DLPNG loop at (a) 160m, (b) 80m, and (c) 40m.

SNR on 160 to 10m. Having a friend do the hard work on an antenna design is always attractive to Steve, particularly as he had just spent a long time in hospital, so he went QRX while Kevin tried a double-sized version of the LoG and then a three-times version. Both of these worked well, each increase in size boosting the output but maintaining the SNR, as measured on his IC-7610 S-meter, or by ear. Such were Kevin's results that Steve finally staggered out of his armchair and slippers and built a triple-size LoG of his own. In contrast to Steve's previous 'flag and pennant' antennas, the triple-size LoG had plenty of output on 160m (and above), only requiring the internal preamplifiers of his TS-890S to boost signal levels.

As you can see from Matt's web pages, the LoG is bi-directional. The original version consists of a diamond-shaped loop with 4.572m (15-foot) sides lying on the ground, fed via a 7:1 isolation transformer. Kevin tweaked the transformer design slightly, using three turns of PVC-coated hook-up wire on the radio side, and eight turns of 28-gauge varnished solid wire on the antenna side, wound on number 73 material). Steve used an Amidon BN-73-202 core **[4]** but a Fair Rite 28730000202 should be fine.

As KD5JY says, this is essentially the same isolation transformer design used by famous DXer Tom Rauch, W8JI for his Beverage antennas in order to minimise common-mode feed-line currents, which can result in noise, and provide a reasonable match to their feeders. The transformer in its IP65-rated waterproof box is shown in **Figure 1**. M6 stainless-steel hardware and crimp/solder tags are used for the loop connections, and the RG-6/RG-11 feeder is connected via a PL-259 plug/ SO239 socket.

Some readers may be unfamiliar with how to count the number of turns on a binocular transformer. Each turn is a complete loop around the binocular core. When making a winding, simply keep track of how many windings appear on the *wire entry side* of the binocular core – if you can see three windings you have made three turns. To assist with this, Kevin has made an excellent Instagram video, showing him winding the primary **[5]**.

The LoG worked as well in terms of improved SNR measured on the Steve's S- meter, as Kevin's had done, and Steve was enjoying recuperating by listening to summer low-band DX on his LoG when Kevin told him he had designed a compact receiving antenna design that worked even better. After some experimentation (and in an attempt to better the length of previous receive-antenna acronyms), Kevin came up with a delta-loop design which forms the basis of this month's featured 'delta-loop pair near ground' (DLPNG) receiving array.

DLNGs and marrying them

The idea of the delta-loop-shaped antenna came to Kevin while experimenting in EZNEC to see if turning a similarly-sized loop to the double-sized LoG into an upright delta loop (ie raising its apex above the ground but keeping its base on it) would be beneficial to performance. After building a 36.5m prototype, fed in the middle of the base in the same manner as the LoG, Kevin found this comfortably outperformed the previous LoGs **[6]**.

Using EZNEC he then tweaked the relative lengths of the delta loop's sides, reducing its overall dimensions by 25% so it would better fit a UK garden. He also raised the centre of the base wire (where the feed-point of the loop is) to 0.6m above ground to improve the performance from 20m to 10m. Despite the size reduction, Kevin found the azimuth and elevation patterns of the prototype loop were maintained, along with most of its dBi output, with even 160m only being a couple of dB down.

Kevin then built the 27.68m circumference single loop from a length of (deliberately) short-circuited RG-59 coaxial cable (see **Figure 2**), firing in the same direction as the existing triple-size LoG. The SNR appeared virtually indistinguishable from the larger 36.5m version. As you can see, the footprint of a single loop is very small, taking up a maximum space of just over 11m and only requiring a single 6m support, such as a small tree, a tree limb, or a fibreglass or wooden pole. A pair of loops at right angles

Table 1: Summary of DLPNG performance.

band	type of pattern	nature of enhancement	actual signal enhancement
160m	end fire	loop directivity	6dB
80m	end fire	loop directivity	6dB
40m	omni	loop directivity	0dB to 4dB
20m	broadside	loop directivity	0dB to 4dB
15m	omni	clover-leaf pattern	0dB to 6dB
10m	omni	high- and low-angle signals	0dB to 6dB

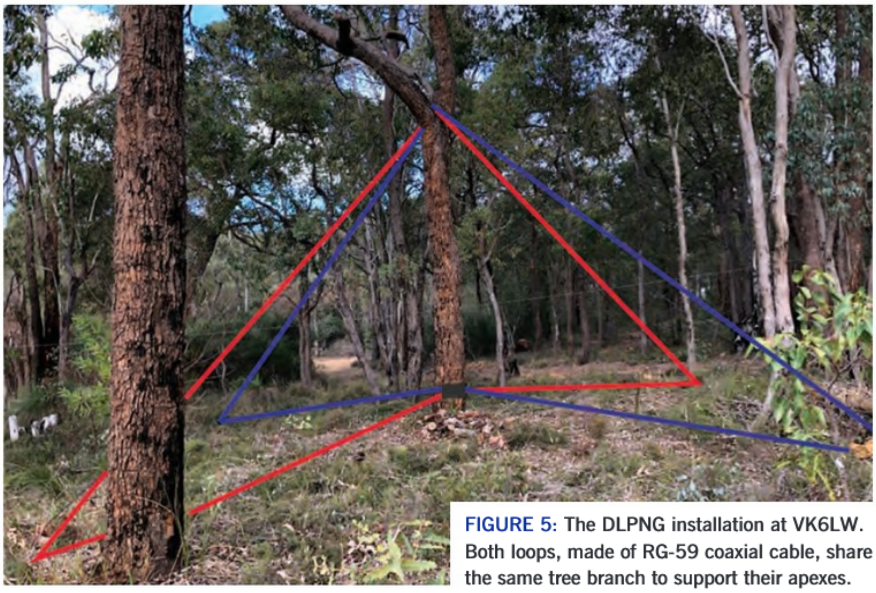

FIGURE 5: The DLPNG installation at VK6LW. Both loops, made of RG-59 coaxial cable, share the same tree branch to support their apexes.

to each other (a DLPNG) fits neatly into an 8m square.

Azimuth and some elevation diagrams of a single DLPNG for 160m to 10m are shown in **Figure 3** and **Figure 4**. Note that for 20m to 10m, only azimuth diagrams are provided but these also show a 'slice' of the elevation pattern at a relatively-low angle (ie to show the loop's DX performance).

Reviewing the performance of the single DLPNG, Kevin realised it broadly followed his EZNEC modelling, with the antenna showing end-fire directivity on 160m and 80m, reasonably omni-directional performance on 40m, and on 20m to 10m the directivity was broadside to the antenna's orientation. As a result, Kevin put up a second loop antenna at right angles to the original one, and found the resulting DLPNG was considerably more directional than EZNEC had predicted. His DLPNG installation is shown in **Figure 5**.

First and foremost his DLPNG array gives you 360° coverage with excellent output and SNR on all the bands from 160m to 10m. The directivity of the antenna's two elements changes from band-to-band, so he simply switches between the two loops and uses the one on which the desired signal is strongest as his receive antenna. It is not necessary to worry about in which direction the array is supposed to be firing! As each loop also has directivity in terms of man-made RF noise, you may find switching from one loop to another may improve the SNR on a signal simply because one loop picks up less of a noise source than another.

After using the DLPNG for about seven months, Kevin has observed that when he switches in his shack from one loop to another, on some signals (and paths) the difference can be as high as 10dB and on others as low as 5dB. Even on 40m, where EZNEC shows a single loop is close to omni-directional, Kevin has found the difference between the two DLPNG loops can be as much as 5dB.

He has also found the DLPNG works well on the WARC bands, particularly on 30m where changing from one loop to another can even improve a signal by 6dB to 10dB.

Have a listen to Kevin's YouTube demonstrations of switching between the DLPNG loops on a JA signal on 15m **[7]** and switching between the DLPNG and his top-band inverted-V half-wave dipole at 27m height on 160m DX signals **[8].**

Table 1 gives you an idea of the signal enhancement on the main HF bands that the DLPNG can provide when you switch from one loop to another. This variability and signal enhancement on all bands seems to be dependent on band conditions and the angle from which the signal arrives, along with other factors such as multi-path and skew-path propagation. Ground conductivity, along with the presence of nearby trees and buildings, may also play a part. Modelling and practical experience showed each loop does not affect the other's performance.

Conclusions

The DLPNG and its single-loop version are lossy non-resonant antennas primarily designed for 160m to 30m, but also perform well on higher frequencies in noisy environments, including the WARC bands. If you don't have space for a pair of loops, then a single loop is still going to be very useful. If your space is really at a premium, it is OK to tweak the relative sizes of the loop's sides, or even reduce the size of the loop by a few metres. While 160m performance may be less effective, the loop should still improve your SNR and be a very good receive antenna from 80 to 10m.

Many UK stations use multi-band vertical antennas for short-wave DXing, such the long-standing Butternut and Hustler models and the newer M0DXC DX Commander ones. Back in his UK days, Steve used antennas like this. These were excellent DX antennas, mounted on top of a two-metre length of scaffold pole tied to the family garden swing, with the four radials per band running along, or close to, the nearby wooden garden fences. But this was back in the early 1970s when noise levels were much lower. While vertical antennas are still excellent transmit antennas, their polarisation means that, on receive, the desired signals can be swamped by man-made RF noise. As Tom Rauch, W8JI has explained **[9]**, it is not that the noise generated is entirely vertically polarised but its horizontal component does not propagate along the ground. In fact, the ground effectively 'shorts out' any horizontal electric fields.

If Steve returned to his 1960/70s home and postage-stamp back garden in 2024, he would still use a multi-band vertical antenna for transmission, but have a DLPNG receive array (or a single loop) next to it to deal with the electronic cacophony. He'd probably use the family wooden clothes line 'prop' to support the receive antenna, as many G3ZZD antenna experiments were supported back then.

References

[1] John Devoldere, 'Low band DXing', Chapter 7, 4th edition, ARRL, 2005

[2] https://www.dxengineering.com/parts/svp-sv-bog

[3] https://www.kk5jy.net/LoG/

[4] Available in the UK from Qubits: https://radio-store.co.uk/multi-aperture-binocular/43-fair-rite-bn-73-202-73-material-binocular-core.html

[5] VK6LW winding the isolation transformer primary: https://www.instagram.com/reel/C3j4moQywsR/?igsh=MTc4MmM1YmI2Ng%3D%3D

[6] The original VK6LW 36.5m delta-loop was noticeably better in practice than the triple-size LoG on 160m, 80m and 20m (and above) in terms of SNR. On 40m it broke-even or was better.

[7] VK6LW YouTube illustration of the DLPNG array's directivity on 15m. Kevin is rapidly switching from one loop to another: https://www.youtube.com/watch?v=hcEqRfngVhk

[8] VK6LW YouTube illustration of the DLPNG performance on 160 versus his inverted vee dipole with its apex at 27 metres: https://www.youtube.com/watch?v=oVoL_MGRXT4

[9] https://www.quora.com/Why-is-man-made-RF-noise-vertically-polarized

Design Notes

Getting at 12V power in modern cars

My car is a 13 year-old Skoda Fabia and the cigarette lighter socket used for extracting 12V is on all the time, independent of the ignition switch. This makes it useful for the occasional /P outing where I don't want to take along a separate heavy 12V battery, and means I've never had the fun of searching around the car for a supply of un-switched 12V. On other makes of car, the socket is often switched with the ignition so users have to tap into a wire permanently carrying 12V with sufficient current rating for their purposes, or pursue the dodgier route of going straight to the battery. I recently needed a supply that was switched with the ignition and, after a bit of fruitless looking behind the few panels I could see, I was almost on the verge of going down to my local friendly garage to ask for their help in removing panels to get at the wiring. But after mentioning this on the RSGBTech Group, I was pointed towards fuse adapters that can be plugged into a car's fuse box to pick up power from in there. They were on the shelf at my local Halfords; two different types of adapter as shown in **Figure 1**. These are for the smaller blade fuse size, but there were similar units for the normal larger-sized fuses too. Subsequent searching on ebay found many suppliers.

It should be noted that the 12V batteries on some newer hybrid cars are much smaller than on older vehicles and go flat very quickly. You may need to take an external battery with you if you are planning on running /P for more than a short time.

Of the two types shown in Figure 1, the larger one is used in place of a fuse already serving a circuit. The existing fuse from that is removed and placed in the adaptor in the position not adjacent to the red wire. A second fuse is then placed in the other position to protect the auxiliary supply taken off and the combination plugged in to replace the original single fuse. The smaller adapter, the red one in Figure 1, is just a single fuse in its own right with a wire connected to it. It can be used to either replace the fuse in an existing circuit, in which case be sure to observe the current rating and which way round it is inserted, or it can be used in a blank space. **Figure 2** shows the fuse box in my Skoda showing several blank spaces on the right hand block. All these are on an ignition-switched supply and the bus bar carrying this can be seen in the lower holes, so be sure to orientate the adapters correctly.

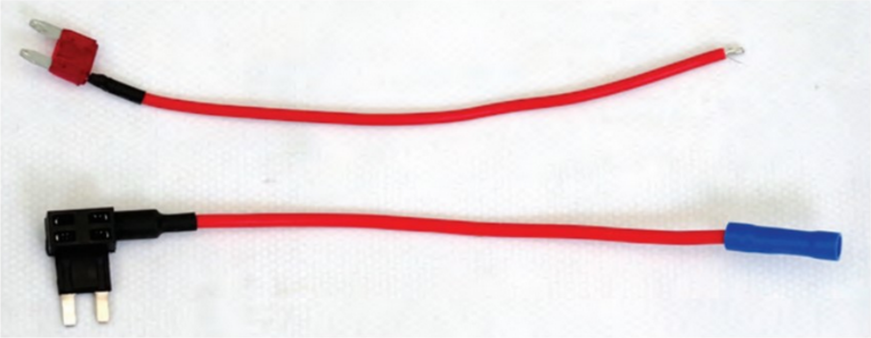

FIGURE 1: **Two types of readily-available fuse taps, designed for getting at 12V from the fuse box of a vehicle without having to dive inside and tap into wiring. They are available for both sizes of blade fuse.**

FIGURE 2: **The fuse box in my car, showing several blank positions that have the active +12V bus behind one of the slots. These make a convenient place to tap from without disturbing existing fuses.**

YouTube videos

I already had a ground/chassis connection for my application, but otherwise getting a good one of these could also be tricky; a 0V connection is not something that can usually be picked up at the fuse box. In the general discussion about this on the group thread, Ian, GM3SEK wrote:

"You or I (another 11/61 Fabia owner) are not the first people on the planet who have wanted to do this particular job. The electrical side is trivial – what we lack is specific knowledge about the car, and for that there's a huge amount of help on YouTube. You'll be lucky to find details about your specific model/year in a single video, so spend some time skim-viewing a range of videos that might be related: other years (of the same mk group), other Skoda models, other VW-group models. Believe me, it will be time well spent. When the touch screen on our Yeti failed, a replacement radio/media player would have cost a fortune, and failure to repair it would have made the car unsaleable. The clues to repairing it were found in two separate YouTube videos, neither of which was actually about the Yeti. The net saving was somewhere north of £1000. The same applies to radio repairs. Whatever the fault, you are almost certainly not the first to have seen it. In fact the older the radio, the more likely it is that someone has already met the same problem and made a video about how they solved it."

Ian posted a link to one such video that showed exactly how to remove a cover near the fuse box and get at a convenient bolt for a good chassis connection. I wouldn't have discovered that by myself!

Needle test probe

Probing around the fuse box to find which switched circuits the various blank positions were on required a thin test probe capable of getting into the slots for the blade fuses; a normal test meter probe was too thick. A while ago I had made up some test probes

FIGURE 3: **Test probe for working on the tiny tracks and pins of SMD printed-circuit boards. This is also useful for probing fuse slots to check which switched circuits they are on.**

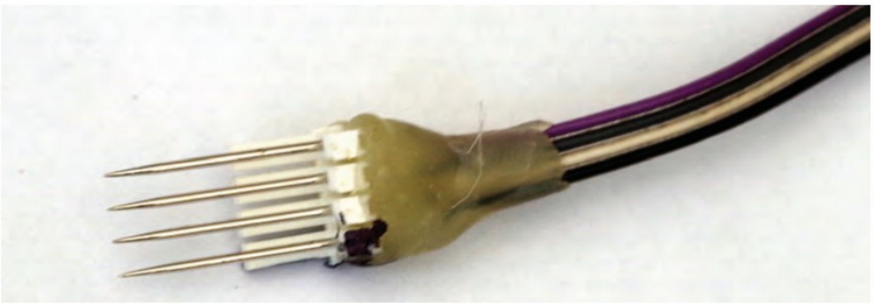

FIGURE 4: **A four-needle version used for in-situ programming, so that a dedicated header is not need for just occasional use.**

for working on tiny SMD printed-circuit boards, specifically for probing the pins on 0.5mm-spaced ICs. A wire was soldered onto a sewing needle, then encased with all but the tip in heat-shrink sleeving as shown in **Figure 3**. To minimise bending fractures, connect the wire well down the body of the needle and cover it all in heat-shrink sleeving, extending this beyond the end of the needle. **Figure 4** shows a four-way probe designed for *in-situ* programming of a PIC microcontroller without wasting PCB space for a dedicated header that might only get used once. Instead, four small pads are placed on the PCB and this four-needle probe pushed onto them for device programming. To make the probe, the metal pins were removed from an existing header strip by warming with a soldering iron and pulling them out. Sewing needles were selected that were a tight push fit into the holes left in the header, then after soldering wires to each one, hot-melt glue was used to secure and insulate the joints.

CW frequency shifter

At a recent club session, we had three operators all trying to resolve a very weak CW signal in noise. Two of the operators wanted the tone of the CW signal in the normal 500Hz to 800Hz 'sweet spot', but the third had an unusual hearing issue and could only resolve weak tones in noise if they were much higher in frequency, around 1500Hz to 2000Hz. You can imagine the problems that caused with netting and RIT adjustments. So thoughts turned to how an audio tone might be shifted so one person using headphones could listen to a tone at a different frequency from that coming from the radio.

A frequency mixer is needed to shift a tone up or down in frequency. To prevent unwanted tones from the two mixer products, the wanted and image products, it therefore needs an image-cancelling design. I thought of two solutions. The first was a DSP-based one, using a technique not much different from, and using identical hardware to, the dsPic-based audio processor **[1]** that converts microphone audio to baseband I/Q drive. A change in LO to convert between audio tones instead of down to baseband is almost all that is needed.

An alternative is a purely analogue approach using two opamps to give a 90° phase shift, followed by two more opamps running as a pair of single-balanced mixers, switched by a logic-level LO drive signal from a ring counter. The outline circuit is shown in **Figure 5**. The first two opamps generate outputs at 90° apart over an audio range covering a couple of hundred Hz. Trimming the two 10kΩ presets allows the best trade-off between the range of audio tones allowed for the input and the accuracy of the phase shift, leading to the level of opposite-sideband cancellation. The second pair of opamps are configured as a gain stage that gives exactly +1 or -1 gain depending on whether the 2N7000 MOSFET is off or on. The I and Q square-wave drive to the gate of the FET comes from a quadrature ring counter or divide-by-four circuit as used in so many Softrock and similar SDR front ends. The result is an audio-frequency converter shifting the frequency up or down by the amount of the LO input. The outline circuitry of Figure 5 does not include DC bias components, and a more detailed look at each of the two critical opamp stages can be found in **[2]** and **[3]**.

I/Q baseband audio converter

We mentioned the audio to baseband I/Q processor described in [1], designed to convert audio to baseband drive for I/Q up-conversion to RF. Paul, G4KZY, and his son Harry, M5HRY, were contemplating a new hardware module, the Raspberry-PI Pico DSP **[4]** to see if it could do the same job more easily and at lower cost.

The Pi-Pico has the advantage over the dsPic solution of using a ready-made module programmed using a standard Raspberry-Pi programming suite with a USB interface. The Raspberry-PI Pico DSP appears to be a very powerful machine, with two standard processor cores as well as dedicated DSP and floating-point ones. That being the case it will certainly match, and probably exceed, the capability of the dsPic devices.

Something to ponder

Back in April 2008, I wrote the first 'Short Circuits' column for this magazine. Looking back on that, I reckon there is not much said in the opening paragraphs that has changed 16 years later, except perhaps suppliers' attitudes to customers. The opening paragraphs are repeated below (with a few minor changes to clean-up the writing style). Has the column deviated in its outlook over the years? Have a read and let me know your thoughts.

Welcome to 'Short Circuits', a new regular bi-monthly column for the home-brewer and anyone who wants to build equipment and accessories for the radio shack. Here we will look at circuit ideas and components in a way that, I hope, will suggest new uses and novel concepts for them, so that readers will take these ideas on board, develop them in turn into something workable, or new, and hopefully report back. We will also be looking at systems design, the logical beginning-to-end thought process that can mean a project works first time, or why it doesn't. We will also cover the bits of circuit design, sometimes even the very basic stuff that often gets overlooked, or has been forgotten, or has grown its own folklore with dire consequences.

Where has home construction gone?

Looking at the various amateur radio publications in recent years it is quite clear that the amount of constructional content has reduced. Does this mean that fewer amateurs are interested in construction, are making things, or what? The various specialist groups all have their dedicated hard-core of builders and designers, but more generally it is difficult to decide with any certainty. What has clearly been happening is that the perception of what can be built at home, when compared with commercial stuff, is suffering. If you compare the looks and appearance of the tiny surface-mounted compact radios, the items of test equipment and accessories from the commercial outlets with what can be achieved at home, there is no comparison. And if it doesn't look as if it will

Andy Talbot, G4JNT
andy.g4jnt@gmail.com

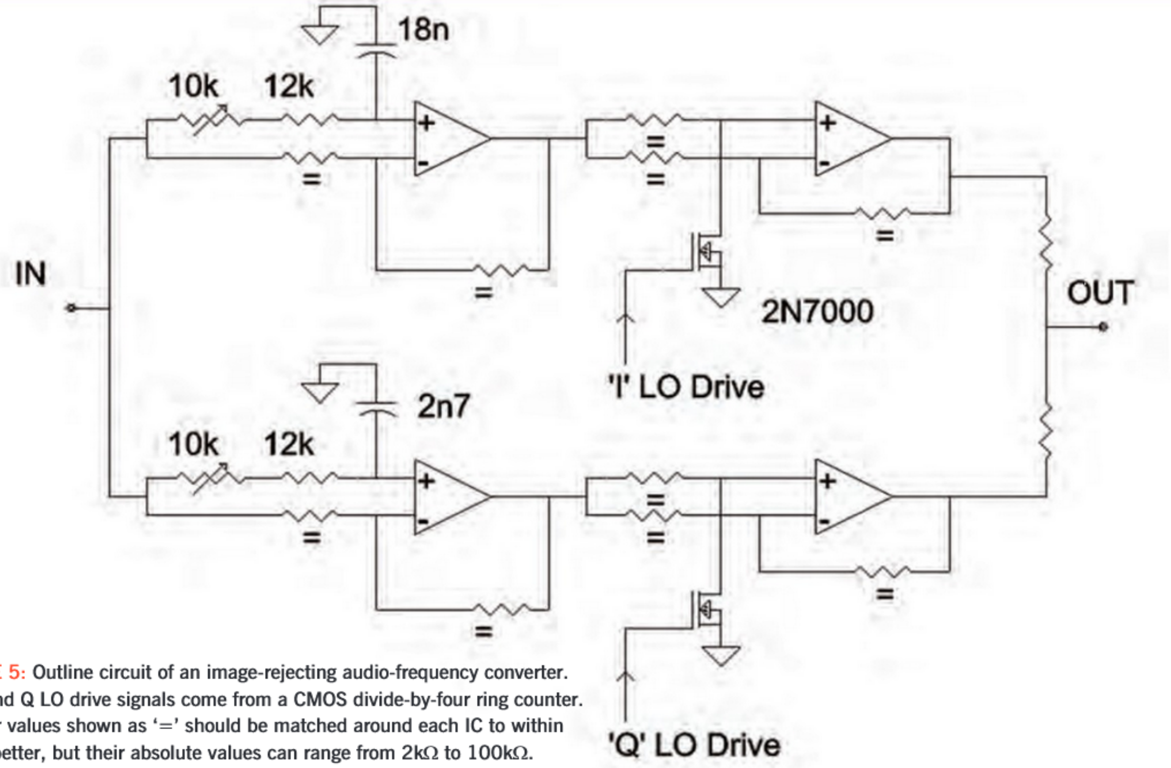

FIGURE 5: Outline circuit of an image-rejecting audio-frequency converter. The I and Q LO drive signals come from a CMOS divide-by-four ring counter. Resistor values shown as '=' should be matched around each IC to within 1% or better, but their absolute values can range from 2kΩ to 100kΩ.

do the job, who is going to show off their latest home built gizmo in a die-cast box, ten times bigger than the one advertised on page 999! And who is going to go to the bother of writing it up for publication when no one will be interested? Such a gloomy outlook leads to an accelerating unstable situation. Fewer constructors write up their projects, leading to an even stronger perception that no one builds anything any more, leading to even less being published and so on until nothing ever appears in print. But this can be forced in the other direction too. A few more published articles on modern high-tech gizmos that do something useful and novel, even those built using birds-nest construction, could hopefully spur others to go the same route and perhaps we'll flip the flip-flop and start showing off what we can do.

Use modern components

Those small shiny boxes only look like that because component and mass-produced automated-assembly technology has allowed it. The electrical performance is better now, simply because they are smaller, can run at higher frequencies and with lower power. But they are still made from recognisable components, resistors, capacitors, inductors, diodes, etc and, of course, integrated circuits. And we can use those same devices, but perhaps just not so neatly.

It is probably safe to say that ICs are around that can now just about do anything we could want, simply, easily, and usually quite cheaply. There are thousands of new devices out there, some very specialist, some general purpose, with functions that can really simplify your projects. And many devices are seriously cheap, giving functionality that was only dreamed of a few years ago for a few pounds, or even pence. Why use a whole handful of discrete components, resistors and wire for a simple project just because it's always been done that way, when a single low-cost chip will do the job now? The device may only be available in a small surface-mount package and easily damaged by rough treatment, but so what? It only cost a few pence and the experience gained by taking the plunge into modern constructional techniques will be invaluable when it comes to using more-exotic and expensive packages in the future.

Sources and data

Many devices are available from the large suppliers like Farnell and RS, whose websites nearly always provide datasheets for download. Suppliers of the more specialist components, such as RF chips, will often sell directly. They usually have minimum order quantities/ values, but look around. There may be other people wanting to buy the same product, so club together. Or look for other products that may be useful from the same company and can be used to make up a minimum order cost. Some companies even offer free samples for development and Analog Devices can have a special mention here as they do a huge range of really well-engineered chips for special functions. Free samples for 'evaluation' can be ordered via their website after filling in a questionnaire, and amateur radio is a recognised and worthwhile activity in their marketing department. One RF semiconductor company, however, is not amateur-radio friendly, has a huge minimum order quantity/ price and their products won't be discussed here unless their policy changes or devices are made available by a third party.

Most of these companies have an interest in ensuring their users can get all the information they need, and they have good libraries for download. Failing that, just type the device number into Google, or your favourite search engine, and wade through the hits. (Hint, type device number followed by the word 'datasheet' to reduce the hits to something manageable. This can be a good way to find even the most obscure device details.)

References

[1] 'dsPic-based audio processor', G8ASG and G4JNT, *RadCom* September 2023
[2] Design Notes *RadCom* May 2016
[3] Design Notes *RadCom* Feb 2019
[4] Raspberry-PI Pico DSP: https://projects-raspberry.com/raspberry-pi-pico-dsp/#Pico_Hardware_Architecture_Overview

HF QRP VSWR/ power meter

Rather than buying a commercial VSWR/power meter, why not make one for yourself? You could build this one in a few hours.

Introduction

VSWR/power meters have been described many times in radio magazines, and there are many commercial units available to buy. I decided to make one of my own. My starting point was the project created by G8GYW **[1]** with a few software changes, notably to the display. The result is shown in **Figure 1**.

My unit uses an ATmega328P microcontroller, which has an 8MHz internal clock. It can handle powers up to 12W and measures the forward and reflected waves using couplers based on binocular ferrite cores type BN-43-202. Results are displayed using an SSD1306 OLED display connected via an I²C bus. There is a battery management system (BMS) for the 800mAh 3.7V battery, type 902535.

FIGURE 1: The completed unit.

The circuit

Figure 2 shows the circuit diagram of the unit. Direct and reflected power are measured by a 'tandem match coupler' using a BN-43-202 binocular toroid. Details of how to wind this, and how it works, are given in **[1]**. This is followed by rectifier diodes and then the ATmega328P's 10-bit analogue-to-digital converters (ADC). The internal 1.1V reference voltage is used for the ADCs. The voltage on pins 23 (A0) and 24 (A1) should not exceed 1.1V. You may like to add two 3.3V Zener diodes (in parallel with resistors R8 and R4) as protection against the unit being used accidentally with a transmitter significantly exceeding a power of 12W.

The ATmega328P DIP 24-pin integrated circuit is well known to assembly enthusiasts, as it is mainly used in an Arduino UNO. The difference here is that it has no external 16MHz quartz crystal. The microcontroller uses instead its internal 8MHz clock, saving cost and space. However, the disadvantage is that you'll have to reprogram the configuration word and the boot loader (the program used to load new software from the serial link). Recovering an ATmega328P from an Arduino UNO will not work without total reprogramming.

The BMS is equipped with a USB type C plug for recharging the battery. I've chosen an 800mA battery, which is more than enough to run the meter all day.

Production and programming

Assembly poses no particular problem, and photos can be found on my Github **[2]**. Particular care must be taken with the winding of the toroid, but the photos published on G8GYW's Github **[1]** are very explicit.

The printed circuit board is sized for use in a 40mm x 50mm x 80mm gray aluminium profile case. The front panel needs to be cut to the dimensions of the display and USB connector, as do the two SMA plugs on the rear. I can supply the PCB; please send me an email if you want one. **Figure 3** shows the completed printed circuit board.

Next comes the programming of the ATMEGA328p component. For this, I have been using a universal programmer **[3]** for a few years. However, if you do not have a universal programmer, it is possible to use an Arduino

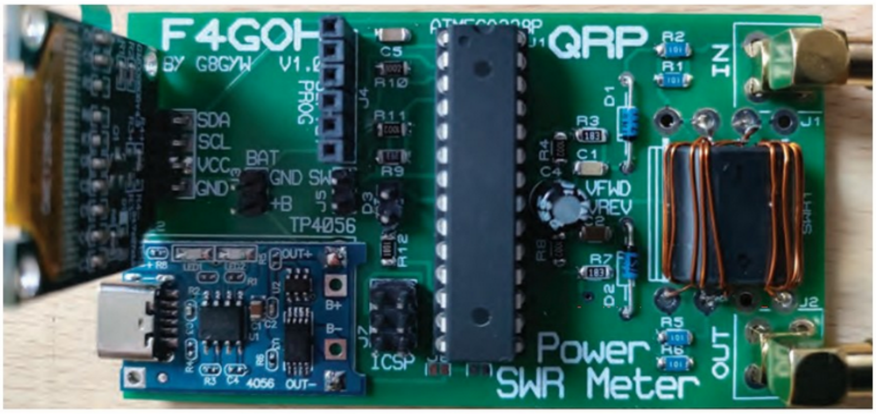

FIGURE 3: The completed PCB.

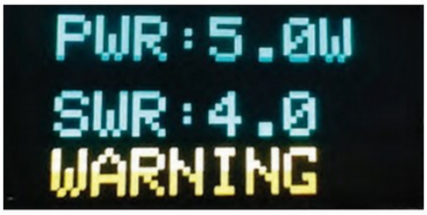

FIGURE 4: The 'classic' display used by G8GYW.

UNO as a programmer by using the J7 connector. The procedure is described on my GitHub [4]. The source code is on my Github [5]. You can easily modify the software in the 'IDE Arduino' environment and reprogram the microcontroller with an FTDI 232 USB adapter at will.

Testing

Start by checking the battery voltage with a voltmeter. It should be sufficiently charged. Upon powering on, the battery voltage is displayed for five seconds, followed by either the standard display or a bar graph display depending on the J8 strap configuration. If J8 is open, the display is that used in G8GYW's original project (see **Figure 4**). If J8 is closed, the display is that devised by F5BEG as bargraphs (see **Figure 5**).

Connect a 50Ω load to the antenna port. Using a QRP transmitter, inject an HF carrier signal of power between 1W and 5W. Verify that the VSWR remains at 1:1. Now connect an HF antenna to the antenna port. Repeat the previous steps to verify proper operation.

Conclusion

With just a few components and a quick set-up, this little assembly will be very useful during portable QSOs to check the tuning of wire antennas hanging on a tree branch. It can also be used with all WSPR-type HF QRP beacons made with an Arduino and an AD9850, as described in previous articles.

References

[1] https://github.com/G8GYW/g8gyw.github.io

[2] https://github.com/f4goh/pwr-swr-meter

[3] https://www.aliexpress.com/premium/XGecu.html

[4] https://github.com/f4goh/pwr-swr-meter/tree/main/programming

[5] https://github.com/f4goh/pwr-swr-meter/tree/main/software

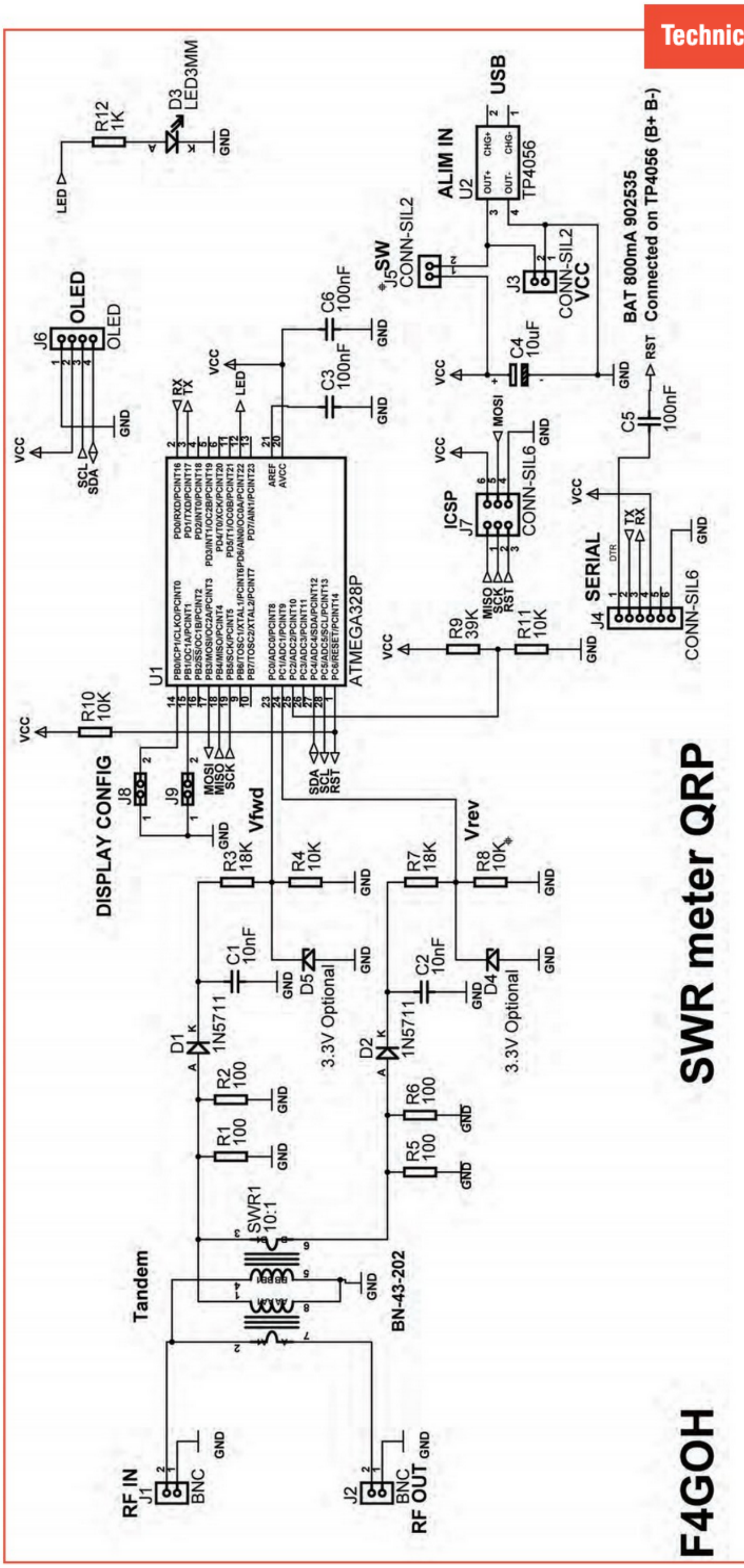

FIGURE 2: The circuit diagram.

FIGURE 5: The 'bar graph' display devised by F5BEG.

Anthony Le Cren,
F4GOH/KF4GOH
f4goh@sfr.fr

Xiegu X6200

The Xiegu X6200 (see Figure 1) is an HF+50MHz all-mode SDR transceiver that has up to 8W output with an external 12V-15V power supply, or 5W output using its detachable 3200mAh battery pack. It also covers the WFM broadcast and aviation bands but on receive only.

FIGURE 1: **The Xiegu X6200.**

Introduction

The X6200 includes a built-in antenna tuner and an integrated VSWR scanner which gives you a good indication of the antenna match. It looks and feels extremely well built, and should be capable of taking the odd knock or two, especially when used for portable operation. It does have side rails for protection but my unit had no rubber feet so it tended to slide about on a shiny surface. There are legs to angle the transceiver for more-convenient use when it sits on a bench (see **Figure 2**). The case appears to be made of aluminium and measures 200mm x 89mm x 51mm. The total weight of the transceiver is around 970g with the battery pack attached.

Operating

All operating controls are at the front and top of the X6200 (see **Figure 3**). A red power button requires a long press to turn on the unit, and a longer press to switch off the power. There is an LED alongside this which is green when the transceiver has booted up and has power, flashes when the battery is charging, and turns red when you transmit. Six buttons beneath the power switch select 'GEN' (general operating settings), 'APP' (gives access to the modem), 'KEY' (set the key type, side-tone, keying speed etc), and 'QSK' (break-in time and a CW trainer). The memory functions are reached using the 'MSG' key which can be used for the automatic transmission of voice, CW, RTTY and BPSK. The 'DFN' key enables you to select noise-reduction and noise-blanker levels. Finally, the 'DFL' key brings up the digital-filter band-width settings, with defaults set at 2700Hz, 2400Hz and 1800Hz for SSB, and 500Hz, 250Hz and 150Hz for CW. Five multi-function buttons below the screen can be used for additional settings within these menus.

Also on the left side of the front panel are two multi-function knobs that have inner and outer rings. The one at the top adjusts volume and, after a short push, allows you to use the outer ring to scroll through and adjust functions such as power output and squelch level. The lower knob enables you to select and scroll through settings within the menus.

It is hard to miss the superb four-inch high-resolution colour screen which has a resolution of 800 x 480 pixels and displays all the main transceiver functions (**Figure 4**). It includes a spectrum display and a waterfall display. The built-in sound card is selected when the FT8 decoder is selected (**Figure 5**). I found the contrast of the screen just right, and all the information was displayed very clearly for reading in most lighting conditions. In the 'display' menu, you can select what you would like displayed through various menus.

On the right of the front panel is a small speaker, and below this is the main tuning knob, which is not large but adequate. On the top of the X6200 is a PTT switch which you can use with an in-built microphone to operate SSB, or you can use the supplied hand microphone with its five buttons for selecting the band and mode (**Figure 6**). (On my unit, which was a prototype, there was bad feedback on all bands when using the in-built microphone with both an external PSU and the battery. Grounding the chassis using the side rails did not reduce the feedback.) To the left of these are three more buttons that select split operation A/B, the ATU function, and 'FST' which, with a short press, enables you to select the tuning steps, and with a longer press locks all the buttons and knobs.

On the right side of the case there is a BNC antenna connector at the top, and below it the power input/charging port. The left side has a Micro SD memory-card slot, two USB ports for accessories, an RJ45 microphone socket, and

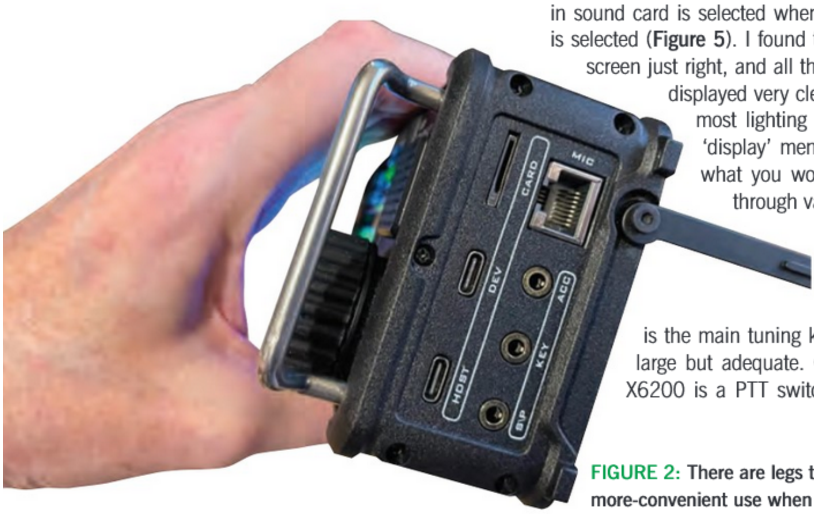

FIGURE 2: **There are legs to angle the unit for more-convenient use when it sits on a bench.**

FIGURE 3: **All operating controls are at the front and top of the unit.**

FIGURE 4: The superb colour screen.

FIGURE 5: The transceiver has a built-in FT8 decoder.

FIGURE 6: The supplied hand microphone with its five buttons for selecting the band and mode.

three 3.5mm stereo jack sockets for an interface, key or keyer, and a headphone output customised through the menus.

In use

I carried out some tests to see just how well it would it perform on the bands. It generally performed very well, although I did encounter one or two annoying issues. I first set 5W power output, connected my G5RV antenna to the BNC antenna socket, and initiated the auto ATU. Tuning was complete within a few seconds and I was ready to put out a few CQ calls on 20m CW. These did not go too well as the audio was terrible and the side-tone barely audible; despite adjusting the settings, I could not get a satisfactory operating condition. Then the display decided to freeze up which eventually required a factory reset. After repeating this process a few times the audio improved slightly and the side tone became louder, but the speaker output was still poor. Was the transmitted signal clean? Well fortunately after several short QSOs a contact with Wolfgang, DK4KN, in Rodenbach resulted in a short discussion on the audio quality and a good audio report was received. No matter what I did during the test period, I could not change the width of the CW filters so was stuck with the three preset values; I chose 500Hz as my default.

Moving to SSB improved things immensely, and the received reports using both LSB and USB were very favourable with comments on the crisp and clear audio. There were several strong stations on the band one afternoon and, after several short QSOs, I had a brief chat with Wim, OT8M in Gigelom who was trying out his new station and microphone and wanted some reception reports. His audio was superb and his comments on my audio were also very favourable, so it seemed that the X6200's transmissions were getting out and of good quality. Shortly after this session the screen locked up again. This required a forced shutdown and the resetting of all my preferred functions. Memories then became erratic and the visual power setting on the main screen disappeared. No matter what I did they would just not appear again but fortunately the power bar on the screen indicated my chosen power output on transmission.

The X6200 does include Wi-Fi and Bluetooth and I was able to connect the former to my network easily, and to wireless headphones using the latter. Digital transmissions proved impossible despite my efforts to operate using FT8. This could be down to the transceiver's firmware, incorrect settings, software drivers or to errors on my part.

The ability to drop the power level to 0.1W was a plus for me as QRPp provides a more-interesting operating challenge, especially as my G90 only drops down to just over 1W. The inclusion of the 60m band is to be commended, especially as it is growing more popular now, while WFM and the air-band reception are useful additions. The in-built antenna tuner works well and matched everything at my QTH, including a 6m vertical antenna, inverted G5RV, Hustler multi-band vertical antenna, a long-wire antenna, and mobile whip antennas.

Conclusion

The X6200 is supplied with a rechargeable battery, a back-lit microphone with a keypad enabling remote control, a serial cable for PC connection, a 12V power cord, and a 42-page manual which does not cover all the 6200's features but will allow you to set up the transceiver for basic SSB and CW operating. Until someone comes up with a 'cheat sheet', it's a case of experimenting with the menus, pushing buttons and seeing what effects they have. Xiegu have almost got things right with this prototype and, if the issues I have described are sorted out in the production model, it would make a superb transceiver for the QRP enthusiast.

Carl Mason, GW0VSW
gw0vsw@btinternet.com

Review

EMI-Spy 2

Locally-generated noise is a problem that affects us all. Here is a device (see Figure 1) from SDR-Kits that can help you track down sources of noise.

Introduction

As we introduce more electronics into the home and shack, each new product potentially raises the noise floor. Whilst the noise produced by well-designed and well-manufactured products is controlled through EMC compliance regulations, an increasing number of devices from overseas achieve their low prices by completely ignoring EMC regulations. The net result is a complex noise landscape that's polluting our radio bands.

Sources of noise come in a wide variety of types, so identifying and dealing with problem devices is a headache for most of us. The new EMI-Spy 2 reviewed here is a versatile tool to help identify those noise sources. Once a source has been discovered, the solution can be as simple as applying ferrite rings or replacing a poor plug-top power supply with a better-quality unit.

Background and development

Professionals measuring electromagnetic emissions use spectrum analysers or specialist measuring receivers. As you might expect, these are expensive carefully-calibrated instruments which are beyond what is necessary to trace interference sources. For this application, we need a receiver that covers the required band, has a signal strength indicator, and an audio output. The audio output is significant because most interference has a characteristic sound, such as whining, clicking, buzzing, etc; we can use this to ensure we locate the most offensive noise source. Ideally, the receiver needs to be hand-held and battery-powered.

There have been many designs over the years, but a presentation at the 56th VHF Conference in Germany (2011) by Michael Lass, DJ3VY, and Dr Jochen Jirmann, DB1NV, set the foundation for the EMI-Spy **[1]**. The original design employed an SA604A low-power FM IF chip as the wide-band receiver. The interesting twist was to use the received signal-strength indicator (RSSI) output to drive an LED bar-graph display and an audio amplifier. The RSSI output provides a temperature-compensated logarithmic output with a dynamic range of more than 90dB. Whilst normally used to drive an indicator of signal strength, the RSSI signal has a fast response time. It can double as a logarithmic AM demodulator with a demodulated response bandwidth of about 100kHz.

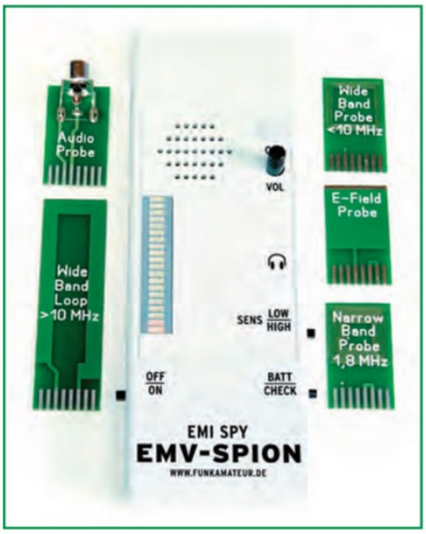

FIGURE 1: The EMI-Spy 2.

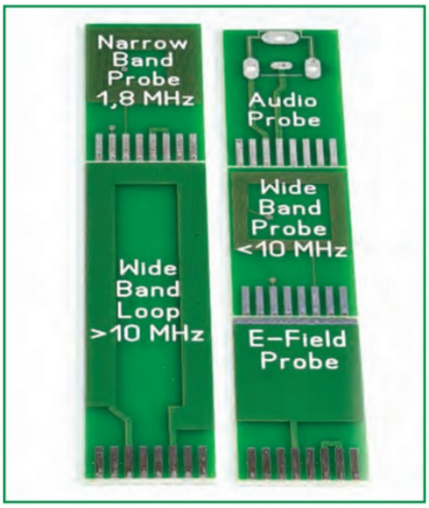

FIGURE 3: The supplied probes.

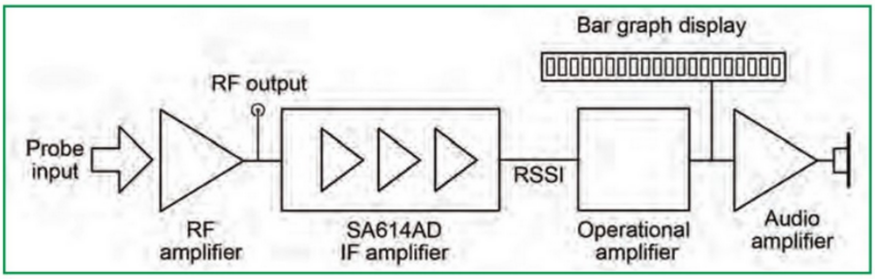

FIGURE 2: A simplified block diagram of the EMI-Spy 2.

The EMI-Spy 2 reviewed here is the second-generation development, and I've shown a simplified block diagram of it in **Figure 2**. The probe input comprises a PCB edge socket, followed by an RF amplifier featuring a common-base BF840 at the input. The output of the RF amplifier feeds into an SA614AD FM IF system. This is an improved version of the original SA604A. The audio and quadrature detectors stages of the SA614AD are unused, but the RSSI output feeds an LM358D dual op-amp before being spilt to the LED bar graph and audio stages. The EMI-Spy 2 uses a pair of LM3914-1 LED drivers for the bar graph. These versatile devices have adjustable references and manage the current drive to the 20-LED display. The popular LM386-1 chip processes the audio, whilst voltage regulation from the 9V battery employs a low-dropout LP2951CM regulator. The only other active part is an LM555CM timer that flashes the least significant LED to show that the unit is running.

To help trace a wide range of EMI sources, the EMI-Spy 2 comes with five plug-in probes (**Figure 3**). These comprise three PCB etched loops, an E-field probe, and an audio jack.

Construction

The EMI-Spy 2 is supplied as a part-assembled kit with all the tricky surface-mount devices pre-installed (**Figure 4**). The remaining parts are all through-hole devices and are simple to install. I completed the build in less than an hour. *Read and understand the manual first*; it is easy to make a mistake which is then difficult to undo. In addition to the step-by-step instructions, the manual contains some vital construction tips. You can download a copy of the manual from the UK supplier, SDR-Kits. I'll add a few tips here to help you avoid some of my mistakes! Additionally, SDR-Kits has produced a step-by-step construction guide with tick boxes to simplify construction further.

The first point to note is that the pre-installed SMD parts are mounted on what is regarded as the underside of the PCB. All the additional parts are installed on the opposite side. Before I started, I cleaned the PCB with isopropyl alcohol and a lint-free cloth. You will need a good small soldering iron. The iron must be reasonably powerful to handle some of the component lugs. I used a Hakko Micro 48W miniature unit, which handled all the components without issue.

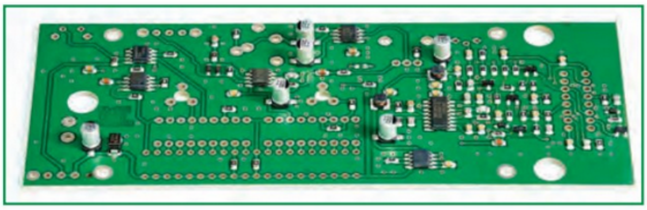

FIGURE 4: **The SMD parts come pre-installed.**

When soldering the edge components, ie the switches, buttons, etc, begin by soldering a single pin (not a lug) and ensure that the device rests flush with the board and at right angles. Once the position is correct, solder a second pin and recheck. If it's still aligned, solder the remaining pins. I found the lugs on button S3 were a very tight fit; you will need firm pressure to fit it flush with the PCB. The chamfer marking the LED bar graph is very small, so be careful (see **Figure 5**). Once the soldering is complete, you need to slot the small end panel into the case before securing the PCB with screws. The supplied PCB screws had slotted heads, so I changed these for M2 Torx screws as they're easier to attach to a screwdriver. Screws with Phillips heads would also work well.

The first test involves applying power with a current meter in series with the battery and monitoring the current draw, which should be around 40mA. Before closing the case, two potentiometers require adjustment (see **Figure 6**). R23 controls the sensitivity of the LED bar graph, and is adjusted so that the least-significant LED stops flickering; it should just show a regular flash. The second potentiometer, R42, calibrates the battery-condition indicator. With the 'BATT CHECK' button depressed and a new battery installed, the preset is adjusted to illuminate the most significant LED. Once the case is closed, the final task is to snap apart the probe PCBs to release the individual probes. The PCBs are pre-cut from both sides so they break cleanly. As a finishing touch, I used 600-grit abrasive paper along the edges of the probe PCBs to provide a clean finish.

EMI Probes

The EMI-Spy 2 is supplied with five detecting probes as follows:

- A narrow band probe comprising a printed 8.5μH inductor that creates a resonant loop at 1.8MHz
- A wide-band loop for frequencies greater than 10MHz
- A wide-band probe for frequencies below 10MHz
- An E-field probe comprising an antenna plate and
- An audio probe for tracing audio signals.

In practice, I found it best to select the probe that provided the clearest indication of the target EMI signal. The audio probe is interesting because it's used to trace audio through a circuit. This makes it handy for tracking faults in audio stages. The E-field probe has similar uses and can help trace audio circuits or cable breaks. One neat feature of the EMI-Spy 2 is the wiring of the probe socket; the pin connections are arranged so that the probes can be inserted either way round.

Tracking EMI sources

The approach depends on the type of EMI. It will often have a specific rasp, squeal, tick, etc. These are the easiest to find using the audio output of the EMI-Spy 2. Just connect a pair of headphones or ear buds and search the local area until you find a device emitting that sound. While testing, I found headphones far superior to the internal speaker as they have a much wider audio range. If you're looking for noisy devices, the audio output is still beneficial when combined with the bar-graph display to show the strength of the EMI signal. I found the EMI-Spy very effective for checking switch-mode power supplies. With the supply switched on and connected to its typical load, a quick sweep with the EMI-Spy 2 using the <10MHz wide band probe will soon reveal any problem devices. While sweeping my shack, I discovered a TP-Link power-over-Ethernet switch emitting a loud screech. Some EMI sources produced a strong indication on the bar graph but very little audio. This suggested they were emitting an un-modulated carrier.

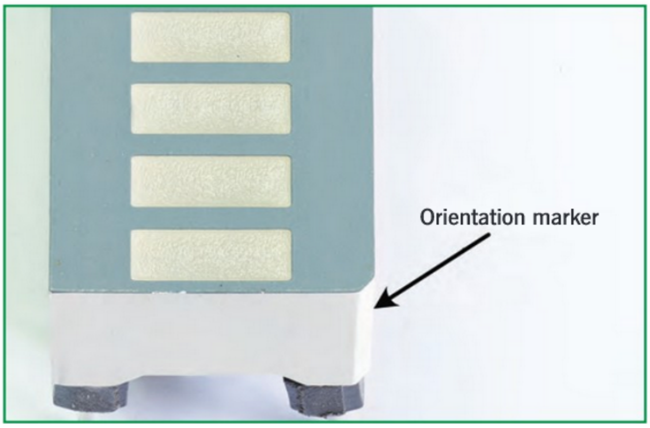

FIGURE 5: **The small orientation chamfer on the LED display.**

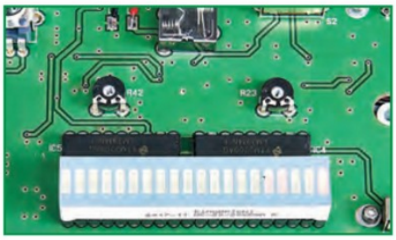

FIGURE 6: **R23 and R42 must be adjusted.**

To help analyse these signals, the EMI-Spy 2 includes an RF output jack. This is usually covered with a blanking plug on the front panel, but provides a connection to the output of the EMI-Spy 2 RF amplifier which can be connected to a spectrum analyser, receiver, or NanoVNA for further analysis. The coaxial plug required is a Taiko-Denki TMP-K01X-A. This simple RF connector is often used for RF connections within amateur-radio kit. A short lead with the Taiko-Denki on one end and SMA on the other is available from ebay. I tried the EMI-Spy 2 RF output with my PicoScope configured as a spectrum analyser. This helped identify specific characteristics of the EMI source. I also tried the EMI-Spy 2 with my RX-888 MKII, wide-band SDR, for a more sensitive indication. This combination displayed the entire frequency range from 1kHz to 30MHz in a single sweep with high sensitivity.

Summary

The EMI-Spy 2 is an easily-built valuable tool for the shack. The result is a professional-looking EMI tracer that can significantly speed up the finding of problem devices. The audio tracing and RF output add to the EMI-Spy 2's versatility. The EMI-Spy 2 costs £99, including VAT and is available from **[2]**. My thanks to SDR-Kits for providing the review model.

Reference

[1] http://www.sk5aa.se/wp-content/uploads/2014/08/EMV-Spion_Folien.pdf
[2] www.sdr-kits.net

Mike Richards, G4WNC
ptamike@hotmail.com

HF/ UHF
antenna relay switch

I began this project early in 2021 at a time when I was getting back into amateur radio after many years of absence, and needed a project to fill my time as a new retiree. I wanted an antenna switch, but couldn't find a commercial product that was within my budget, so I decided to build my own. I am pleased with the result (see Figure 1).

FIGURE 1: **The HF/UHF antenna switch.**

Introduction

My antenna switch needed to have selectable HF ports, as well as UHF ports. This would work well with a multi-band transceiver that I had just acquired, and to which I had already fitted a diplexer to connect both HF and VHF/UHF ports to a single coaxial feeder. The advantage here was that it needed just the one hole drilled through the side of the house. Of course, the other end of the feeder needed switching to select the antenna, so an antenna relay board was required, preferably inside a waterproof enclosure and suitable for the HF and UHF bands.

I had already designed the circuit, but before I could start, I needed to identify a suitable enclosure that was either rated to IP67, or could be made to be watertight. I found one at **[1]** that had the required environmental rating, and incorporated an RF-shielding gasket as well. The 3D CAD file was also available, which I promptly downloaded and imported into 'DesignSpark'.

Mechanical details

'DesignSpark' is a Windows-based 3D mechanical-design software tool that is freely available from **[1]**. I found this quite intuitive to use, and there are plenty of training materials on YouTube to get you going quickly. The software can import several different file formats, including 3D step files that interface nicely with other CAD tools such as 'PCB design' which I had used in my career before retirement. On the web you can find most items, such as components, mechanical fasteners, etc, from sources such as **[2]**. Component manufacturers and retailers now commonly supply 3D files for their parts, which makes life in the CAD world much more accessible than when I started several decades ago.

Armed with component specifications, 3D component files, and design tools, I set out to build a bespoke coaxial relay assembly in an IP67 box with four HF ports and a couple of UHF ports. The selected enclosure measured 200mm x 150mm, with internal dimensions of 180mm x 130mm. Internal height was a little restricted at 24.5mm, but the relays I had selected for the design would fit at a pinch. The overall size had sufficient area to allow for the HF and UHF antenna ports, the transceiver port, and a cable gland for a control cable.

For HF switching, I decided on using four OMRON G2RL-1E 12V 16A single-pole double-throw relays. These relays use a pair of parallel contacts to achieve the current rating of 16A, so they should be more than adequate for the job at HF. For safety, the relays were configured so that the unused HF ports were grounded when not in use, giving some protection from electrostatic build-up on the antennas.

For VHF/UHF switching, I opted for a pair of PCB-mounted coaxial relays, the ubiquitous CX120P (see **Figure** 2) useable up to 1GHz. This relay might even serve at 23cm but I've not tried it. At HF, the power rating of these relays is 250W, with 60dB of isolation between ports, and losses of no more than 0.05dB. At VHF and UHF, the maximum power rating drops to 200W and 150W respectively, with losses of no more than 0.2dB.

FIGURE 2: **The coaxial CX120P relay.**

Although the CX120P relays would fit inside the enclosure, there was little extra space for the thickness of the PCB and stand-off pillars. The issue was routing to and from the coaxial relays.

Ordinarily, you need a minimum of three

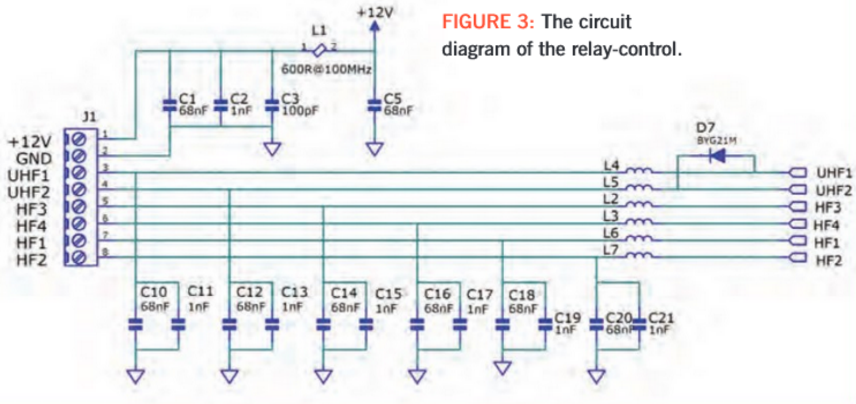

FIGURE 3: The circuit diagram of the relay-control.

times the width of the transmission line to any enclosure wall. A 50Ω micro-strip, with a trace width of 3.1mm, wasn't going to achieve the required clearance. Instead, I used semi-rigid RG402 coaxial cable for the relay connections.

Electrical details

Figure 3 shows the relay-control circuit diagram, and **Figure 4** shows the wiring of the RF relays. The relays are pulled low to energise. The two coaxial relays are organised so that the transceiver port is connected to the first coaxial relay, K3 which, in its normally-closed state, directs the RF to the HF relays. When the UHF1 port is selected, the coaxial relay, K3, diverts RF to the second coaxial relay K4.

The UHF2 control line switches RF between the two UHF ports connected to relay K4. However, we still need to hold relay K3 energised, and thus D7 pulls the UHF1 control line low if the UHF2 control is selected. This just saves the necessity of holding both control lines low when selecting the normally-open UHF2 port. All the relays have back-emf protection diodes across them and, to protect the relays and diodes, use is made of low-voltage varistors, which serve as both transient suppressors and decoupling capacitors as the varistors typically have capacitances of 5nF. The control interface cable is connected to the PCB using an 8-pin terminal block with a cut-out at the edge of the board to enable a cable gland to be placed adjacent to the connector. Each input, and the 12V power line, are filtered to reduce any RF emanating from the control cable, which itself should be screened.

Figure 5 shows the underside of the PCB with the RG402 semi-rigid coaxial cables in place. You will observe that I have used over a thousand ground-stitching vias to connect the top and bottom-ground planes. RG402 is a 3.6mm-diameter 50Ω cable with a braided copper outer jacket, a PTFE dielectric, and a solid 0.9mm core. It is rated to carry a maximum of 600W, so more than capable for this task. The outer jacket can be soldered, and can easily be cut with a sharp blade. Don't cut directly through the outer braid; rather, just run the blade around the circumference firmly, and then gently fracture the cut by wiggling each side of the braid between fingers. You will find the braid easily separates, but before it gives up its grip on the PTFE core, it requires some heating. Use a hot soldering iron to heat the braid, and then remove it with either pliers or side cutters. It usually comes away quite easily using this method.

To bend the RG402 cable, I used a 12mm

David A Allen, G8LHD
david.camtech@outlook.com

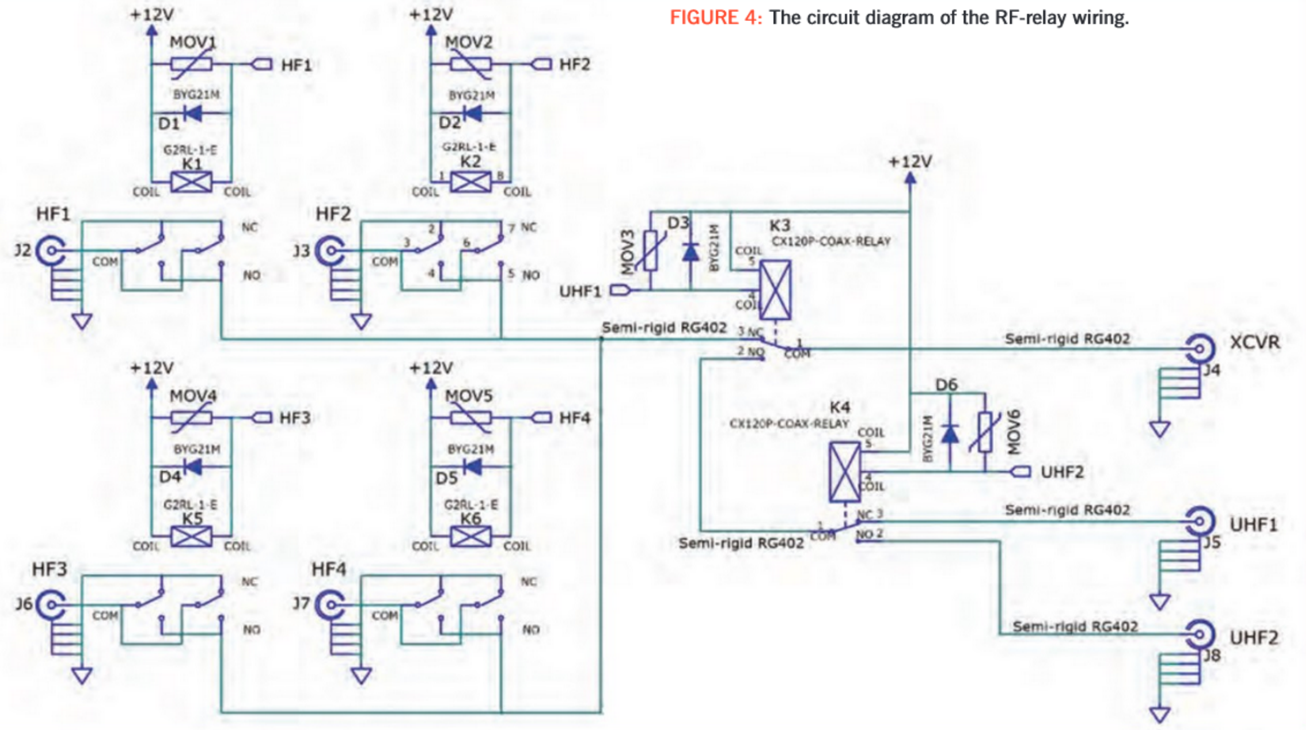

FIGURE 4: The circuit diagram of the RF-relay wiring.

mandrill to form the bends before cutting to length. Strip back the PTFE to leave enough core for a soldered connection to the N-type panel sockets etc, then solder the braid to the underside of the board. Ordinarily, soldering to a large copper surface area is difficult, but the copper planes have been given regular cut-outs to reduce heat conduction away from the joints. Most of the smaller components, decoupling capacitors, ferrite beads, and protection diodes, are surface-mount devices (SMD). These days, SMD is preferable to leaded components for cost and space-saving properties. **Figure 6** shows the completed underside of the PCB, with the semi-rigid coaxial cable in place.

Figure 7 shows the top view of the PCB; note the semi-rigid cores prepared and ready for soldering to the N-type panel connectors. The cores are all bent up to receive the connector solder-buckets. Note that, when placing the N-type panel connectors, the solder bucket opening should face the semi-rigid cores. Similarly, the PL259 solder-bucket terminations should face inwards towards the relays. Once the top assembly has been completed, trim the G2RL relay pins to improve clearance with the case. The fully-assembled PCB is then secured to the enclosure using twenty-eight 5mm M3 stand-off pillars.

Assembly

To mount the PCB in the case, some metalwork skills are required. The easiest way to locate the hole positions is to transfer from the PCB using an indelible marker, taking care that the PCB is the correct side up. Drill the back of the case as this is a uniformly-flat surface. The front of the case is identified by a recessed area suitable for a label, so you can distinguish between back and front quite easily. This label recess is also a convenient place to add your own label to identify the ports. I used an X-Y coordinate milling table to drill the holes; I also have a fully-dimensioned drawing if you need one. Once the holes have been drilled, the N-type panel and PL259 sockets can be secured with a little bit of clear silicon sealant between the side of the connectors and the case. Use just enough to make a watertight seal. Use four M3 x 5mm threaded stand-offs pillars instead of nuts on the inside of the enclosure to secure the RF connectors, noting the correct orientation mentioned earlier. The screws need to be countersunk; my PL259s and N-type panel connectors each had countersunk mounting holes, but use pan-head screws if your connectors do not have countersunk holes. Make sure that the screws are long enough to go through the case, the stand-off pillars, and the PCB. M3 x 16mm is suitable for this.

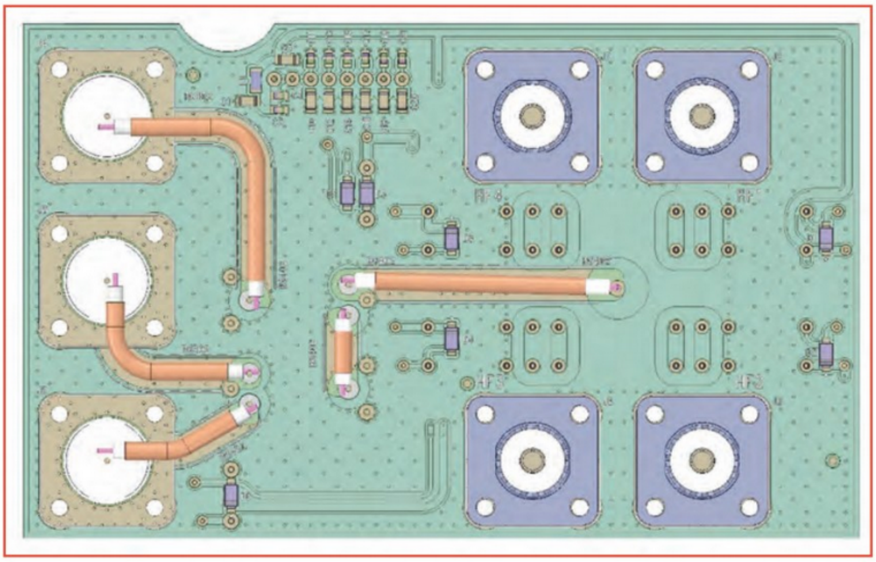

FIGURE 5: **The underside of the PCB, showing the arrangement of the semi-rigid coaxial cable.**

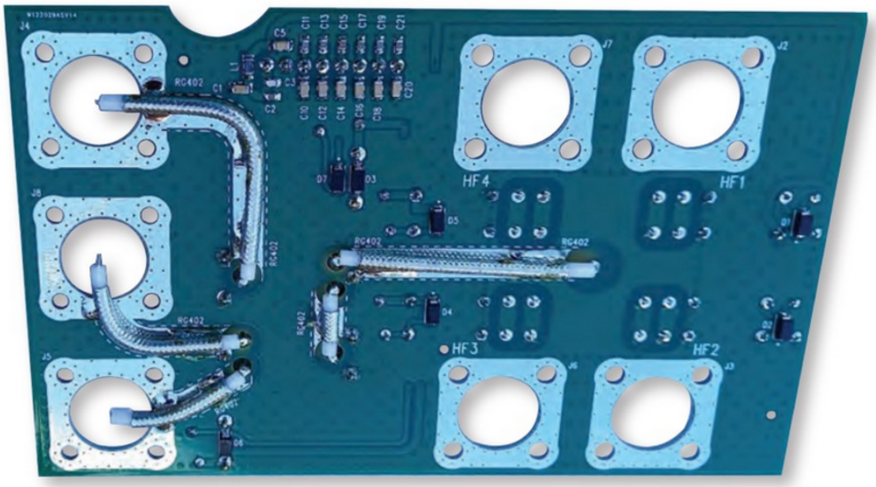

FIGURE 6: **The completed underside of the PCB, with the semi-rigid coaxial cable in place.**

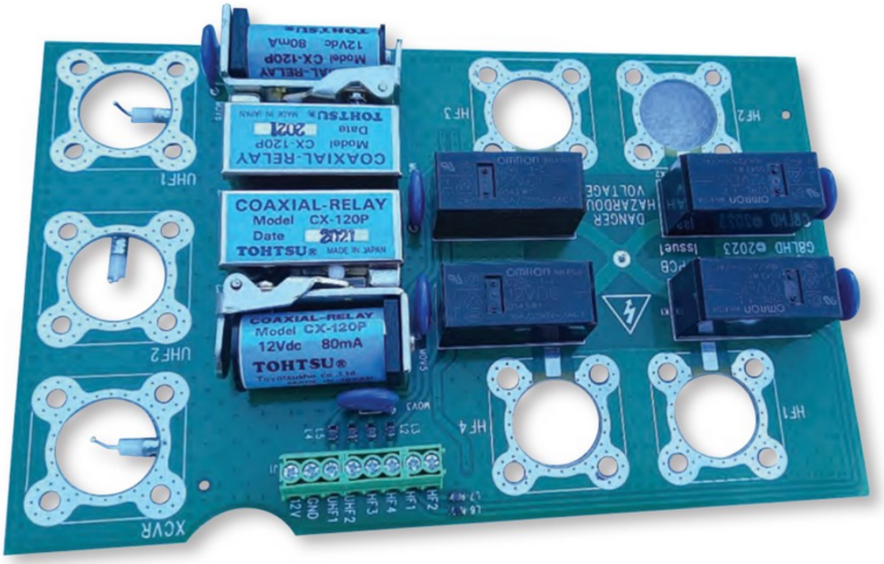

FIGURE 7: **The top view of the PCB.**

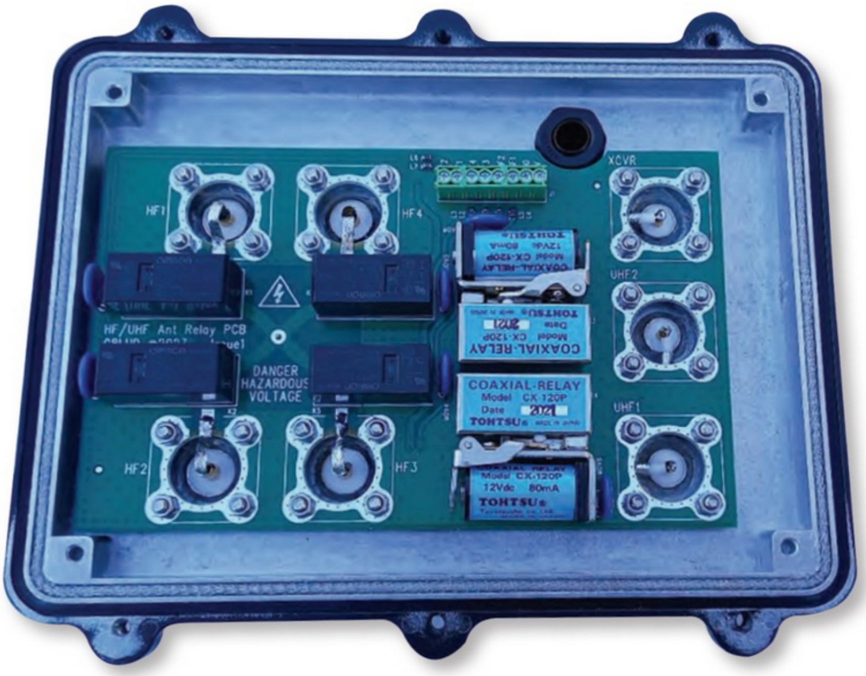

FIGURE 8: The completed wiring inside the enclosure.

The semi-rigid coaxial cables can now be connected to the centre pins of the three N-type panel connectors. If you've followed the text, and have correctly placed the N-type panel sockets with the solder buckets facing the semi-rigid cores, then it's just a simple matter of dropping the board onto the standoff pillars and securing the board with split washers and M3 nuts. Once the board has been secured, the RF relays can be wired to their respective sockets. Use either a short length of copper braid to each of the HF relays, or short lengths of solid copper wire.

Figure 8 shows the completed wiring inside the enclosure before closing the box. The control cable is a screened 7 x 0.2mm^2 tinned copper core with an outer PVC jacket of 5.6mm diameter. Alternatively, an 8-core (8 x 0.2mm^2) RS232 data cable can be used which is considerably less expensive. Wire each of the port controls, noting the colour code of the conductor associated with each port. The screen should be connected to the GND pin of the terminal block. Take care the screen doesn't short to anything else; a piece of heat-shrink tubing placed over the braid and jacket inside the enclosure will insulate it.

Remote control of the antenna switch is just a question of applying 12V to the PCB terminal block marked +12V, and connecting the respective control wires to ground. A single pole 6-way switch can be used to select the desired antenna. In the shack, I use an Arduino-based controller with an LCD display, which gives me a description of the selected antenna. (Basic details of this can be found at **[3]**).

Testing

Tests were conducted using a NANO VNA. The calibration for insertion loss was at a scale of 2dB per division over the frequency of interest. HF calibration was carried out initially from 1MHz to 30MHz, and then extended to cover the 4m band at 70MHz just to see if performance dropped off. It didn't, so I extended the measurement to the VHF 2m band as well. The results are shown in **Table 1**, and **Table 2**.

At a calibrated scale of 2dB/div, the losses to the HF1 port were observed to be typically 0.03dB between 1MHz and 70MHz, and interestingly only 0.19dB at 146MHz. Test results for the UHF ports were conducted between 50MHz and 440MHz. The insertion losses between the transceiver and the UHF1 and UHF2 ports were good. Remember, we are going through two coaxial relays and the semi-rigid cable between the relays and the port terminations. The VSWR at VHF was a little higher than expected at 1.4:1 but this dropped at UHF to a respectable 1.2:1. The real surprise was the performance of the G2RL-1-E relays which held up even at VHF with a through loss of only 0.19dB.

In use, although the enclosure is IP67 rated, PL259s are anything but. The unit in hot weather will also outgas (as hot air expands it is forced through the seals). It is therefore best practice to protect the unit both from the worst of the weather and from direct sunlight. Even with a sealed IP67 enclosure, rain was an issue when the unit was sitting in the midday sun at some 50°C and then suddenly chilled by a sudden rainstorm. As the temperature rapidly cools, the air pressure differential between the inside of the enclosure and the environment causes the unit to draw in water through the seals. Measures can be taken to avoid this. A vent plug manufactured by Wiska is available from several suppliers (Rapid Electronics stock number 59-1204). This solution allows the equalisation of the air pressure whilst keeping moisture and water out.

To seal the PL259s and N-type panel plugs, I recommended you purchase a reel of 'Denso Tape'. This is a waterproofing cloth tape, and I acquired a 50mm x 10m roll. Those of you familiar with it will know that it's quite messy, and has a somewhat unpleasant odour, but it is very effective. A tip is to cut a short length of tape and squeeze the waterproofing goo out, so that you can then apply some of it directly to the threads of the connectors. Take care not to contaminate the centre pins, and wear some disposable gloves when you do this, as invariably it gets everywhere. Unused sockets can be capped with blanking caps that can be found on Amazon, ebay, etc. Finally, wrap all the RF connections with short lengths of 'Denzo-Tape' and, for the best results, protect the 'Denzo-Tape' from weathering with self-amalgamating tape or a cable boot. (PVC black shrouds may be purchased from **[4]**, 'cable-glands-cable-gland-shrouds' for 20mm glands, and are just about the right size to slip over RF connectors protected with 'Denzo-Tape' and make it look professional.

I have a few PCBs which I can supply if you are interested. **Table 3** lists the bill of materials.

References

[1] https://uk.rs-online.com/web/
[2] https://www.3dcontentcentral.com/
[3] https://projecthub.arduino.cc/g8lhd/amateur-radio-remote-aerial-switching-unit-d5c1be
[4] https://www.cef.co.uk/
[4] https://www.cef.co.uk/

Table 1: Losses and VSWR between the transceiver and HF1.

Frequency (MHz)	Loss (dB)	VSWR
1	<0.1	1.02:1
3.5	<0.1	1.01:1
7	<0.1	1.01:1
14	<0.1	1.02:1
21	<0.1	1.03:1
30	<0.1	1.04:1
50	<0.1	1.08:1
70	<0.1	1.12:1
146	0.19	1.39:1

Table 2: Losses and VSWR between the transceiver and each of the VHF/UHF ports.

Frequency (MHz)	Transceiver to UHF1		Transceiver to UHF2	
	Loss (dB)	VSWR	Loss (dB)	VSWR
50	0.07	1.15:1	0.07	1.15:1
70	0.12	1.21:1	0.12	1.21:1
145	0.16	1.40:1	0.15	1.39:1
440	0.17	1.22:1	0.17	1.15:1

Table 3: The bill of materials.

Qty	Reference	Part name	Description	Manufacturer	Manufacturer part no	Part no
6	MOV1-6	B72210S0140K101	14V 5A 2.0J 43V clamp voltage varistor		B72210S0140K101	RS 289-6746
7	D1-7	BYG21M	diode 1.5A 1000V fast avalanche SMA	Vishay	BYG21M-E3/TR	RS 710-4581
1	C3	CAPC2012_100PF_200V,100pF,%	capacitor SMD 100pF 200V 0805	AVX	08052A101JAT2A	RS 135-6659
7	C2 C11 C13 C15 C17 C19 C21	CAPC2012_1N_250V,1nF,10%	capaciotor SMD 1nF 250V 0805	TDK	C2012X7R2E102K085AA	RS 741-4664
8	C1 C5 C10 C12 C14 C16 C18 C20	CAPC3216_68N_200V,68nF,10%	capacitor SMD 68nF 200VDC X7R 1206	AVX	12062C683KAT2A	RS 698-3645
2	K3-4	CX120P-COAX-RELAY	coaxial relay CX120P		CX120P	thedxshop.com
4	K1-2 K5-6	G2RL-1-E	HF relay 16A 12VDC coil	Omron	G2RL-1-E DC12	RS 365-0535
1	J1	PHOENIX_PT-1.5/8-3.5-H	terminal block, PCB, 3.5MM pitch, 8-way 10A 300V	Phoenix Contact	PHOENIX_PT-1.5/8-3.5-H	RS 804-5562
4	J2 J3 J6 J7	PL259 UHF connector	SO-239 female chassis socket, square flange, panel-mount, 4 holes			m0mat.co.uk
3	J4 J5 J8	N-type panel connector	N-type female chassis socket, square flange, panel-mount, 4 holes			m0mat.co.uk
6	L2-7	WURTH_742792096_FERRITE_BEAD 1000R@100MHz	ferrite bead, 2 x 1.2 x 0.9mm, 0805 (2012M), 10000	Wurth	742792096	RS 124-1837
1	L1	WURTH_742792118_FERRITE_BEAD 600R@100MHz	ferrite bead 1206 [3216] 600R @ 100MHz	Wurth	742792118	RS 787-9967
1			black nylon cable gland, M12 x 1.25 thread, 3-6.5mm, IP68	RS Pro		RS 669-4654
1			RS Pro black aluminium enclosure, IP67, flanged, black Lid	RS Pro		RS 771-7639
28			M3 x 5mm spacer RS Pro, hex brass, standoff pillar	RS Pro		RS 222-367
28			M3 x 16mm C/S stainless screws			Amazon UK
28			M3 nuts			
28			M3 split washers			
1		PCB	HF-UHF antenna relay switch PCB			G8LHD

Contest Calendar November 2024

Ian Pawson, G0FCT

RSGB HF Events

Date	Event	Times (UTC)	Mode(s)	Band(s)	Exchange
Mon 4 Nov	Autumn Series DATA	2000-2130	RTTY, PSK63	3.5	RST + SN
Sat 9 Nov	Club Calls (1.8MHz AFS)	2000-2300	CW, SSB	1.8	RS(T) + SN + Club info
Wed 13 Nov	Autumn Series SSB	2000-2130	SSB	3.5	RS + SN
Sat 16 Nov	2nd 1.8MHz Contest	1900-2300	CW	1.8	RST + SN + District code
Mon 18 Nov	RSGB FT4 Contest	2000-2130	FT4	3.5-28	Report
Thu 28 Nov	Autumn Series CW	2000-2130	CW	3.5	RST + SN

RSGB VHF Events

Date	Event	Times (UTC)	Mode(s)	Band(s)	Exchange
Sat 2-Sun 3 Nov	144MHz CW Marconi	1400-1400	CW	144	RS(T) + SN + Locator
Tue 5 Nov	144MHz FMAC	1900-1955	FM	144	RS + SN + Locator
Tue 5 Nov	144MHz UKAC	2000-2230	All	144	RS(T) + SN + Locator
Wed 6 Nov	144MHz FT8 AC (4 hour)	1700-2100	FT8	144	Report + 4-character Locator
Wed 6 Nov	144MHz FT8 AC (2 hour)	1900-2100	FT8	144	Report + 4-character Locator
Tue 12 Nov	432MHz FMAC	1900-1955	FM	432	RS + SN + Locator
Tue 12 Nov	432MHz UKAC	2000-2230	All	432	RS(T) + SN + Locator
Wed 13 Nov	432MHz FT8 AC (4 hour)	1700-2100	FT8	432	Report + 4-character Locator
Wed 13 Nov	432MHz FT8 AC (2 hour)	1900-2100	FT8	432	Report + 4-character Locator
Thu 14 Nov	50MHz UKAC	2000-2230	All	50	RS(T) + SN + Locator
Tue 19 Nov	1.3GHz UKAC	2000-2230	All	1.3G	RS(T) + SN + Locator
Thu 21 Nov	70MHz UKAC	2000-2230	All	70	RS(T) + SN + Locator
Tue 26 Nov	SHF UKAC	1930-2230	All	2.3G	RS(T) + SN + Locator

Best of the Rest Events

Date	Event	Times (UTC)	Mode(s)	Band(s)	Exchange (Info)
Wed 6 Nov	UKEICC 80m	2000-2100	SSB	3.5	6-character Locator
Sat 9-Sun 10 Nov	WAE DX RTTY	0000-2359	RTTY	3.5-28	RST + SN
Sun 10 Nov	UKuG Low Band	1000-1400	All	1.3-3.4G	RS(T) + SN + Locator
Sat 23-Sun 24 Nov	CQ WW DX CW	0000-2359	CW	1.8-28	RST + CQ Zone (UK = 14)
Wed 27 Nov	UKEICC 80m	2000-2100	CW	3.5	6-character Locator

For all the latest RSGB contest information and results, visit www.rsgbcc.org

Is a low VSWR always a good match?

The answer to this question should be 'yes' on the face of it. A low VSWR would suggest the Tx is matched and feeding all of its power to the antenna via the ATU. But is all this power actually getting to the antenna?

A discussion

This note is the result of a chat I had with a friend of mine who was asking about tuning up a random length of end-fed wire and he achieved 'quite a good' VSWR as he put it, at around 1.6:1. But he was wondering if his signal was getting out OK. The wire was close to a half wave on the band of interest (80m) so a high impedance at the feed point was expected. Aware of this, he had a 12:1 unbalanced-to-unbalanced transformer (unun) feeding the antenna. This would bring down the impedance presented to the ATU. Many ATUs will struggle to match an antenna feed point much above 600Ω, and a half-wave end-fed wire could have an impedance of several kΩ. The arrangement in question is shown in **Figure 1**. The VSWR monitor is measuring the VSWR at point A, looking at the input to the ATU.

My suggestion was to tune up the transmitter to the best possible match at a low power. Certainly with most rigs tuning up with as much as 5W should be fine, but check the rig's handbook to be sure that 5W into a bad match is OK. In practice his rig, a QRP one, could be set to a low value of 0.2W and the VSWR monitor could reliably function with this low power figure. It is also important to use a steady CW (key down) type of signal. Most VSWR monitors use a diode to rectify the RF voltage to a DC voltage. Diode monitors can respond in an unpredictable way to complex modulation schemes that involve pulsed type waveforms.

With the transmitter off, disconnect the antenna (Figure 1 at B) and then, without altering the settings, turn the transmitter back on. The VSWR should now have a much higher value; take a note of it. Ideally it should be very high, maybe greater than 10:1, but if it is less what does this mean?

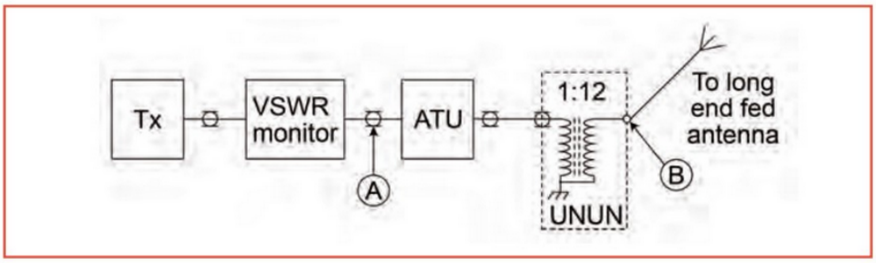

FIGURE 1: My friend's arrangement for feeding a half-wave long wire.

One answer can be found in the chart in **Figure 2**. There are a number of charts of this type in other texts, but I have chosen one from the ARRL Antenna Handbook **[1]**. This chart tells you the loss in a length of matched transmission line with either an open or short circuit applied at the far end. It can be applied equally to any arrangement where, rather than a transmission line, a selection of reactances (inductors and capacitors, eg an ATU) is used to make the impedance at the input to the assembly (Figure 1, point A) of the ATU and antenna a good match (usually approaching 50Ω

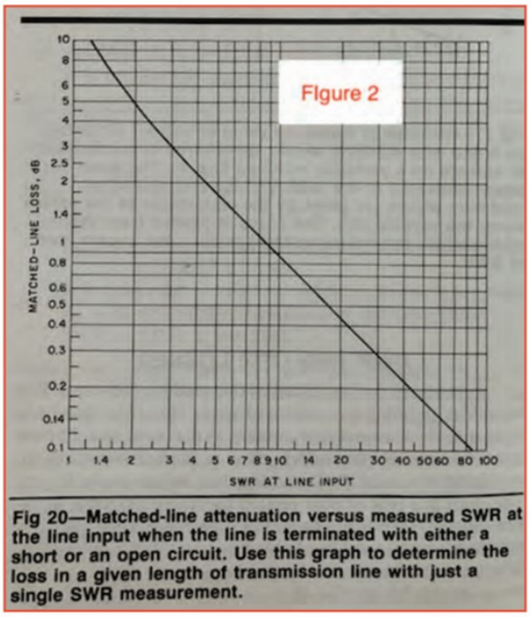

Fig 20—Matched-line attenuation versus measured SWR at the line input when the line is terminated with either a short or an open circuit. Use this graph to determine the loss in a given length of transmission line with just a single SWR measurement.

FIGURE 2: A chart showing the loss in a length of matched transmission line with either an open or short circuit applied at the far end.

FIGURE 3: My own arrangement for feeding a G5RV antenna.

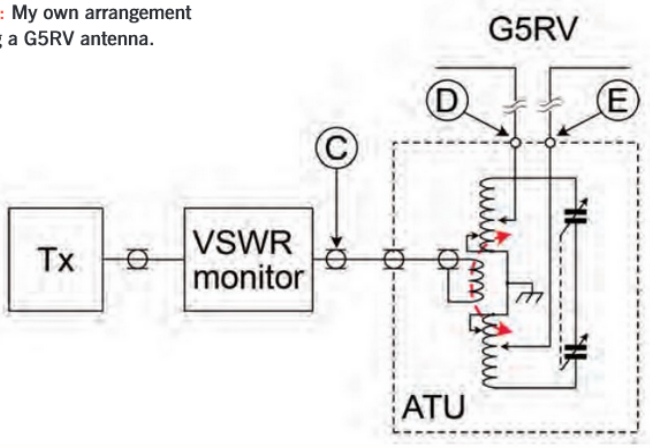

resistive with very little added reactance). Most VSWR monitors are designed around 50Ω.

To investigate the point being made, I tuned up my rig on 80m with my G5RV antenna and then did the test. I was running the rig with CW at just under 5W, and it tuned up nicely with a VSWR of a around 1.2:1. I then removed the rig and the VSWR monitor and used an AIM4300-DX analyser to look at the input to the ATU (point C in **Figure 3**).

Figure 4 shows the analyser plot, demonstrating the matched condition of the ATU and G5RV antenna. **Figure 5** shows what happens when the antenna is removed (ie open circuit with points D and E in Figure 3 disconnected), and **Figure 6** shows the plot when points D and E are connected together (ie short circuit). Note that Figure 5 also shows an internal resonance in the ATU but it is well away from the operating frequency of 3.70MHz.

It should be noted that the short circuit and open circuit responses are quite different (this would be true also with a transmission line) but at the frequency of interest both show a VSWR >10:1. From the graph in Figure 2, VSWR = 10:1 corresponds to a loss of around 0.85dB. This is not an unreasonable value for the insertion loss of an ATU.

Much above a VSWR of 10:1, the accuracy of the monitor in the rig would be suspect; what is wanted is as high as possible a VSWR when open circuit. At the other extreme of the scale, don't believe a VSWR of 30:1 on your meter. This would imply a transmission loss of 0.3dB which would be suspiciously too good!

I have seen numerous examples when conducting this type of test that a match of 1.2:1 becomes 1.5:1 on open circuit resulting in a warm ATU and not much being radiated! The main idea in this note is to be wary of a good VSWR when tuning up. With the antenna disconnected, if the VSWR still has a low value this tends to suggest the ATU has tuned up to some resonance in the ATU and not matched the antenna too well. It might also imply a high loaded 'Q' value which results in greater loss.

Reference

[1] ARRL Antenna Handbook, 16th edition, pp 24-14 (Figure 20).

Bob Richardson, G3XMB
r.richardson7@btinternet.com

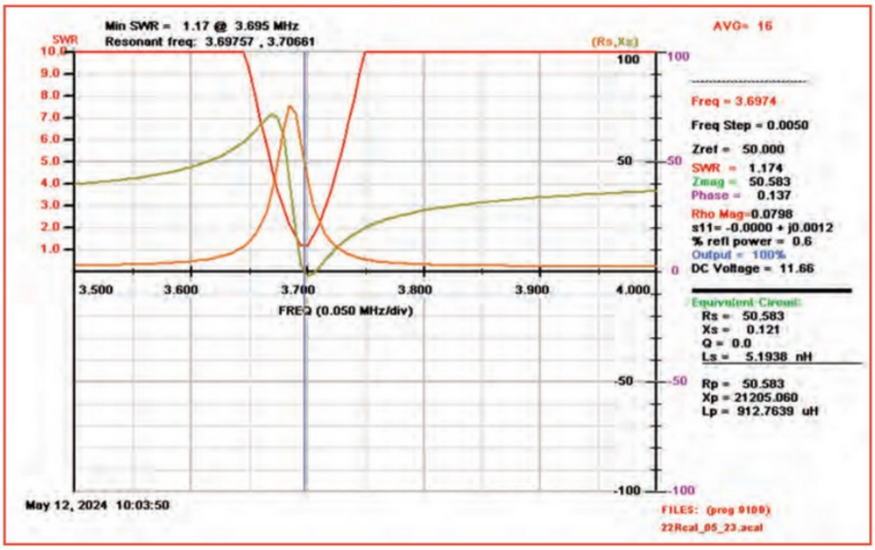

FIGURE 4: Analyser plot when the antenna is attached and the ATU is tuned for lowest VSWR.

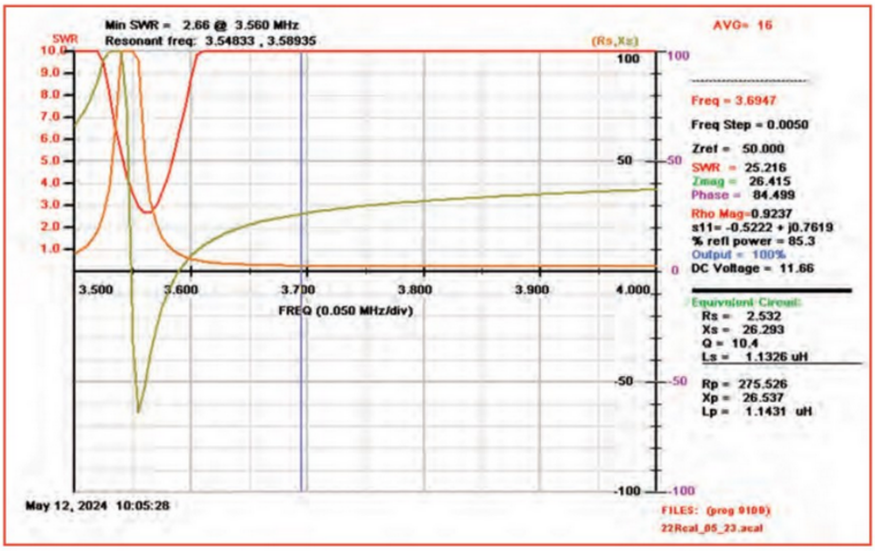

FIGURE 5: Analyser plot when the antenna is disconnected.

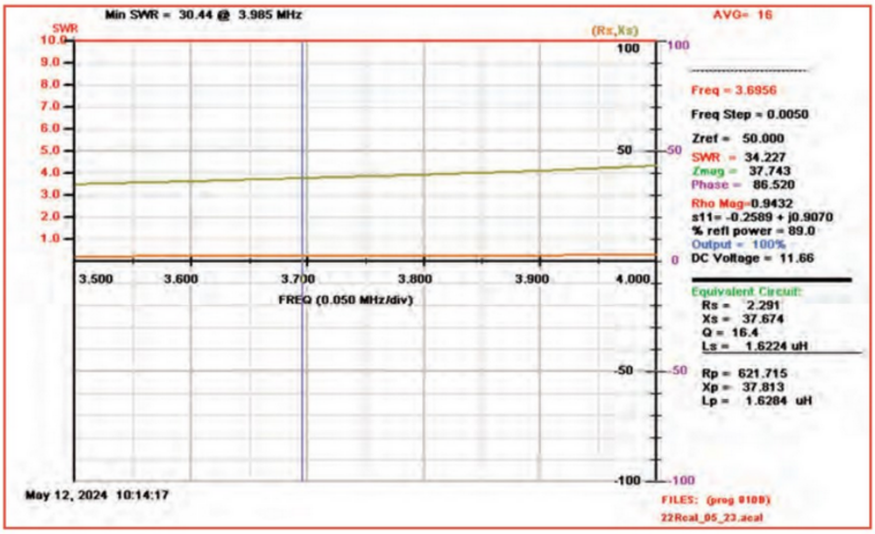

FIGURE 6: Analyser plot when the antenna terminals are shorted together.

The home-brew dilemma

FIGURE 1: **The anonymous home-brew box.**

FIGURE 2: **The FOXX-3 transmitter, housed in an Altoids tin.**

FIGURE 3: **The front had a row of seven switches with a single one lower down, and four miniature sockets.**

The amateur radio pursuit of home-brew is out there in all shapes and sizes. But what can you do with the unlabelled boxes and circuit boards? Here's my story with one particular item.

Introduction

There you are at a Hamfest. The dealers have their seductive wares laid out. There are the main manufacturers with the latest black-box offerings to take a bite out of the retirement lump sum, or attract nearly-new equipment in part-exchange. But the wares on display are not all brand new. On other tables there are examples of yesterday's technology for sale, each one looking the same as it did when it first appeared on the market, but somehow just not as shiny and desirable as they were when you saw them years ago. Back then this or that transceiver was the 'latest thing', but now there's a later 'latest thing' – there always is. It's a result of progress. But these examples of superseded technology still work, and if they don't there's a manual, or service data, or even a manufacturer or dealer prepared to repair them. Above all, the controls have labels and the inputs and outputs at the back have indications of what they are for. It's an orderly world.

But there's a less orderly world, and that is amateur-radio home-brewed equipment; it comes in all shapes and sizes. There are finished projects and unfinished projects, labelled projects and unlabelled projects, populated circuit boards and empty circuit boards. What to do with them? Rip them apart for components that you may never use? Display them on a shelf with the idea of getting them working one day, but only if you can find out what they are and what they do?

I will confess that a degree of sentiment comes into all this because we often know who made them. Examples of home-brewed equipment that come into our possession may be things that we have inherited, or bought at a club auction, or even received as a gift, so frequently we do know who constructed them. Perhaps the circuit board has initials or a callsign set there in copper alongside the working tracks. We might recognise the trick of filling holes with Araldite on an old project box so that it can be used again. Or we might know about the diligent use of a particular system for the coloured wires in a piece of equipment.

What to do?

What can we do with these home-brewed boxes? In particular, what can we do when we don't know what they are or what they are meant to do? Often there are no labels to indicate what the knobs on the front are actually for, and the backs have sockets and fittings, none of which offer any guidance about what goes in where and how much, and what comes out where, and how much? And of course there's no handbook, and no circuit.

Is it worth trying to fix something if you don't know what it does? Is it worth bothering to find out? After all, why would anyone embark on the construction of a radio when there is so much professionally-manufactured equipment readily available on the market? This of course is to miss the whole point of home-brew which, whilst it is very occasionally a matter of necessity, a pressing need for a piece of kit that no-one makes, is more often home-brew for the pleasure of the journey, the joy of actually making something, of having the experience and meeting the challenge.

An example

Having come back to amateur radio after a long break, I have been eager to understand what goes on 'under the bonnet' of every piece of equipment in the shack. It is one way of furthering one's knowledge and, in the case of home-brew, it becomes pleasurable detective work that has a valuable instructive content. Let's look at an example (see **Figure 1**). It is a simple rectangular die-cast box. I just love these boxes for their precision, weight, and the fact that they screen the contents. It always seems to be the serious home-brewed box, a permanent container. This one had, along the front, a row of unlabelled switches and little else. There were no instructions and no name. But I knew that it came from the bench of Derek, G4GVM, now a Silent Key. Derek was a QRP enthusiast and was instrumental in the design of the FOXX-3 transmitter that was ingeniously housed in an Altoids tin (**Figure 2**) and is still supplied as a kit by Kanga Products **[1]**. If this die-cast box was something made by Derek, then it was worth keeping. The front had a row of seven switches with a single one lower down, and four miniature sockets (see **Figure 3**). The only clue was that one of the sockets had 'OUT' written in pencil underneath.

But what was inside? I unscrewed the lid and there was a circuit board with seven integrated circuits (ICs), two transistors, and a crystal alongside a preset capacitor (**Figure 4**). A pair of connectors, linked in series for PP3 batteries, lay to one side. Now, I know that many radio amateurs far more experienced than me will know what this circuit does, especially when I report that the crystal was marked on the top with '1.000000 MHz'. Later, I happened to describe the box to John, G4FHI, mentioning the 1MHz crystal and he knew immediately what it was for, but at the time I opened the box I did not know. I wondered if the ICs might give me a clue. There was an MC14007CP, an RCA CD4068BE, a couple marked MC14011CP and three RCA CD4518BE (**Figure 5**).

Now, the joy of the internet is that it is relatively easy to find out what an IC does because data sheets can be called up simply by typing the IC number into Google. But it should be understood that data sheets are incomprehensible to the layman and the new radio amateur without years of experience in matters electronic, and are something of a challenge. Nevertheless, I discovered that the MC14007CP was a multi-purpose device that could be configured in a variety of ways to do a variety of things. No help there! The CD4068BE was a CMOS NAND/AND logic gate. I wasn't sure this took me much closer to knowing what might be going on. The MC14011CP was another logic gate. The important thing was how it was being used.

There were three ICs marked CD4518BE. The

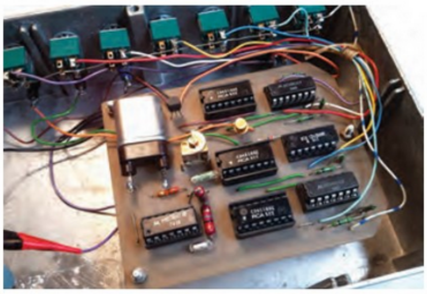

FIGURE 4: **Inside the box.**

data sheet told me that these each contained a pair of identical decade counters. In total therefore, there were six decade counters, and there were seven switches on the front. I assumed that the decade counters were for dividing a signal by ten. Was it possible that the first of the seven switches gave us 1MHz, switch 2 then divides by ten to give 100kHz, switch 3 10kHz, and so on until at switch 7 we have 1Hz pulses, ie one pulse per second. The whole idea of dividing a million pulses per second and, in effect, selecting every millionth pulse, seemed to my innocent mind something verging on the impossible.

What was clear, by tracing the wires, was that the single lower switch on the front turned the device on and off. Well, I reasoned that the next thing was to try powering it up and seeing if there was any output on the little socket marked 'OUT'.

I linked up my Hantek digital oscilloscope, and there was the 1MHz signal and, on the second switch, the 100kHz signal appeared (**Figure 6(a)**) and 10kHz (**Figure 6(b)**) on the third. These were all reasonably neat square-wave pulses but at 1kHz, things began to get very ragged indeed (**Figure 6(c)**) and even worse at 100Hz and 10Hz although still the correct frequency. Finally, the one-second pulse was nothing more than a spike. This, as I was told later, was all symptomatic of a series C and parallel R high-pass filter, with a cut-off frequency of a few kHz; I can't now recall whether I was using the 'AC' setting on my oscilloscope, rather than the 'DC' setting, or it might have been built-in to the circuit. Well, at least it worked, after a fashion. It was possible to switch in more than one frequency but the digital oscilloscope was not able to show this.

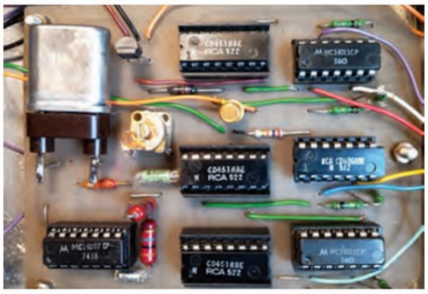

FIGURE 5: **The ICs.**

The other side of the board

As yet I had only seen one side of the circuit board, so I undid the three fixings and turned it over. To my surprise, there on the hidden side was the information that this was a *Practical Wireless* project for a CMOS crystal calibrator, AM0438, dated 1976 (**Figure 7**). So I was dealing with a published project from 1976 and before long I had found the article, by M.E.Theaker, in the March issue of that year **[2]**. This crystal calibrator was made over forty years ago at a time when a precise signal source would have been valuable for checking equipment and also would have had applications in respect of the growing use at that time of digital circuitry, since it generates square-wave pulses. The personal computer was just coming onto the market with rapid developments in integrated circuitry for central processors and memory chips.

On the underside of the board there was a 20pF capacitor that had been soldered across the 60pF trimmer, but one end was now disconnected. This looked as if it had been an attempt to shift the crystal frequency slightly, since abandoned.

The *Practical Wireless* article was helpful, showing the circuit and explaining that one of the transistors was a voltage regulator and the other an amplifier that could be turned on by plugging in a link between two of the sockets on the front. It may be worth looking for the reason that has caused the output waveform to have deteriorated, perhaps first by checking the more obvious components. But that is for another day, when I will be making some minor modifications that will include adding some labels to the switches, and an LED to indicate when the unit is switched on. I might also add a label describing its operation, with a reference to the issue of *Practical Wireless* that contains the circuit diagrams and other details. This is a piece of home-brew that stays with me for the foreseeable future.

References

[1] https://www.kanga-products.co.uk/product/the-foxx-3-cw-transceiver/

[2] M.E.Theaker, 'CMOS Crystal Calibrator', *Practical Wireless*, March 1976, pp 968-975.

FIGURE 7: **This was a *Practical Wireless* project from 1976.**

Duncan James, M0OTG
duncanjames1066@btinternet.com

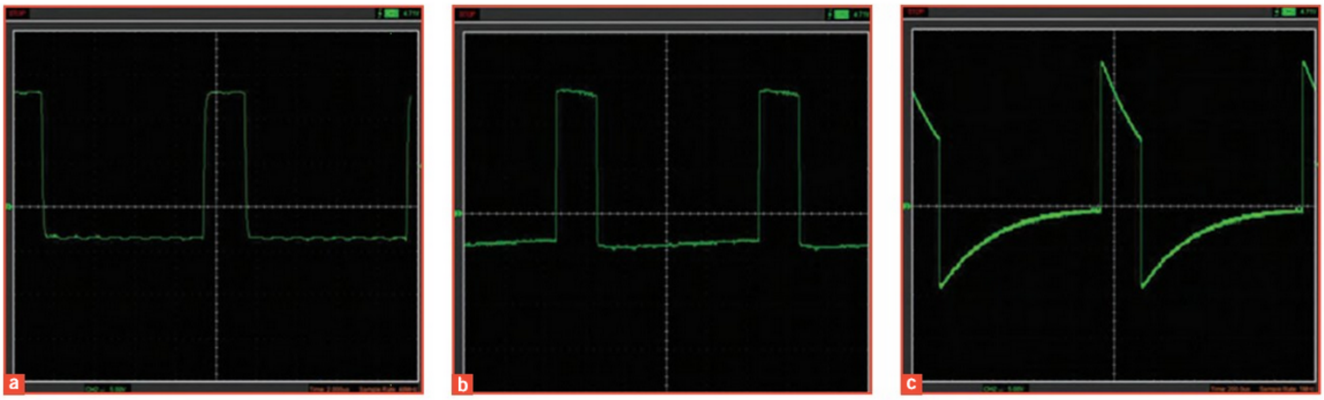

FIGURE 6: **The signals, (a) 100kHz, (b) 10kHz, (c) 1kHz.**

The development of the HF transceiver

1973 - 1986

I have a number of radios that illustrate the development of the HF transceiver between about 1973 and 1986, and I thought it worthwhile to take a walk down memory lane and look at how they developed over time.


FIGURE 1: The FT-101.


FIGURE 2: The Heathkit SB-102.

This article represents by personal view and is not intended to be comprehensive. Nevertheless, readers may enjoy recalling the equipment that we used in previous decades. Here I discuss transceivers made specifically for radio amateurs that were solid-state, covered several HF bands, were self-contained, and were capable of transmitting SSB signals at about 100W. I'll highlight the important technical developments in the evolution of the transceiver, which radios first introduced the technology, and I will illustrate and describe these using my own collection. The major developments to be covered took place between 1973 and 1986. After this period, there were few significant developments before the introduction of digital signal processing in about 2000.

Background

To set the context, it is useful to review the radios available before 1973 when the first all-transistor HF transceiver became available. Before this, those on sale were either constructed using valves, or used a combination of valves and solid-state devices, the so-called 'hybrids'. These were often constructed using transistors everywhere except for the final output stage of the transmitter; the classic example is the Yaesu FT-101 (see **Figure 1**). There were also a few sub-100W all-transistor transceivers, but these will not be considered here.

Whilst there were some Japanese radios available, eg the FT-101, the majority of radios were of US origin using brand names such as Swan, Collins, Ten-Tec, Drake, Hallicrafters and Heathkit (**Figure 2** shows the Heathkit SB102). There was also the British KW2000. In terms of technology, the majority of these were hybrids, with a few using only valves. The receivers used superheterodyne (or 'superhet') techniques, with a mix of single and double frequency conversions. **Figure 3** illustrates the difference between the two. The performance of a single-conversion receiver is compromised if a low intermediate frequency (IF, eg 455kHz) is adopted, which allows high-performance IF filters to be used, but with image frequencies at twice the IF away from the wanted signal (eg 910kHz), making designing front-end filters tricky. On the other hand, it is more difficult to produce

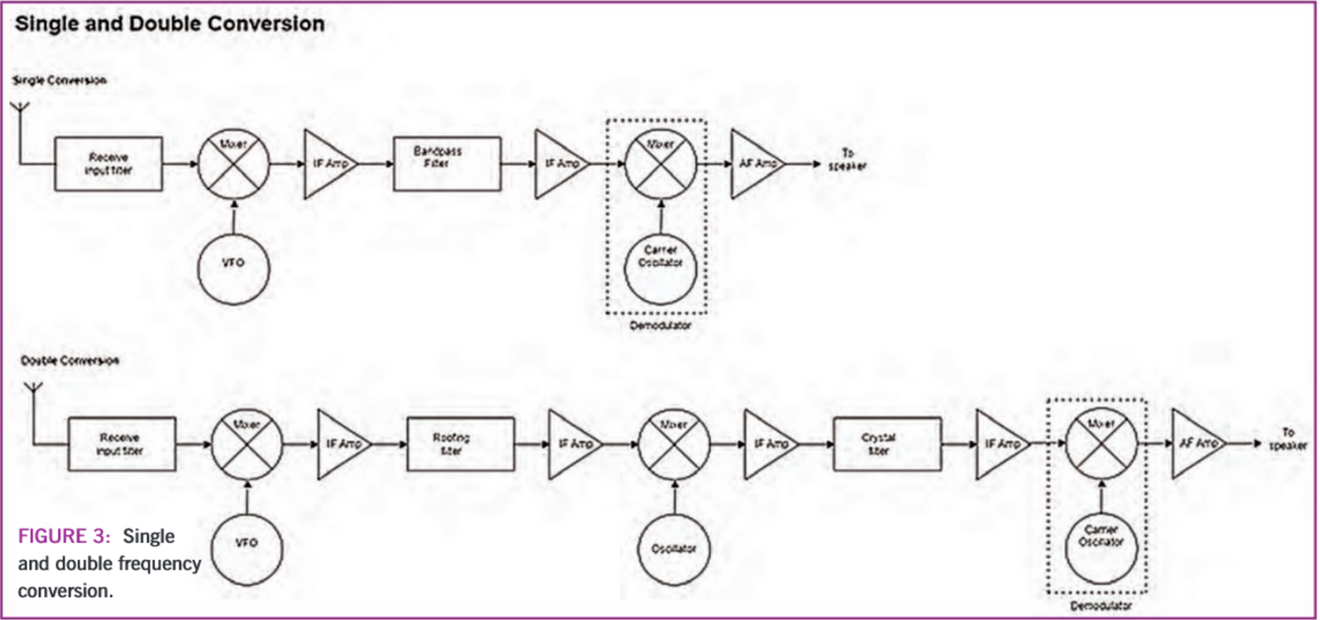

FIGURE 3: Single and double frequency conversion.

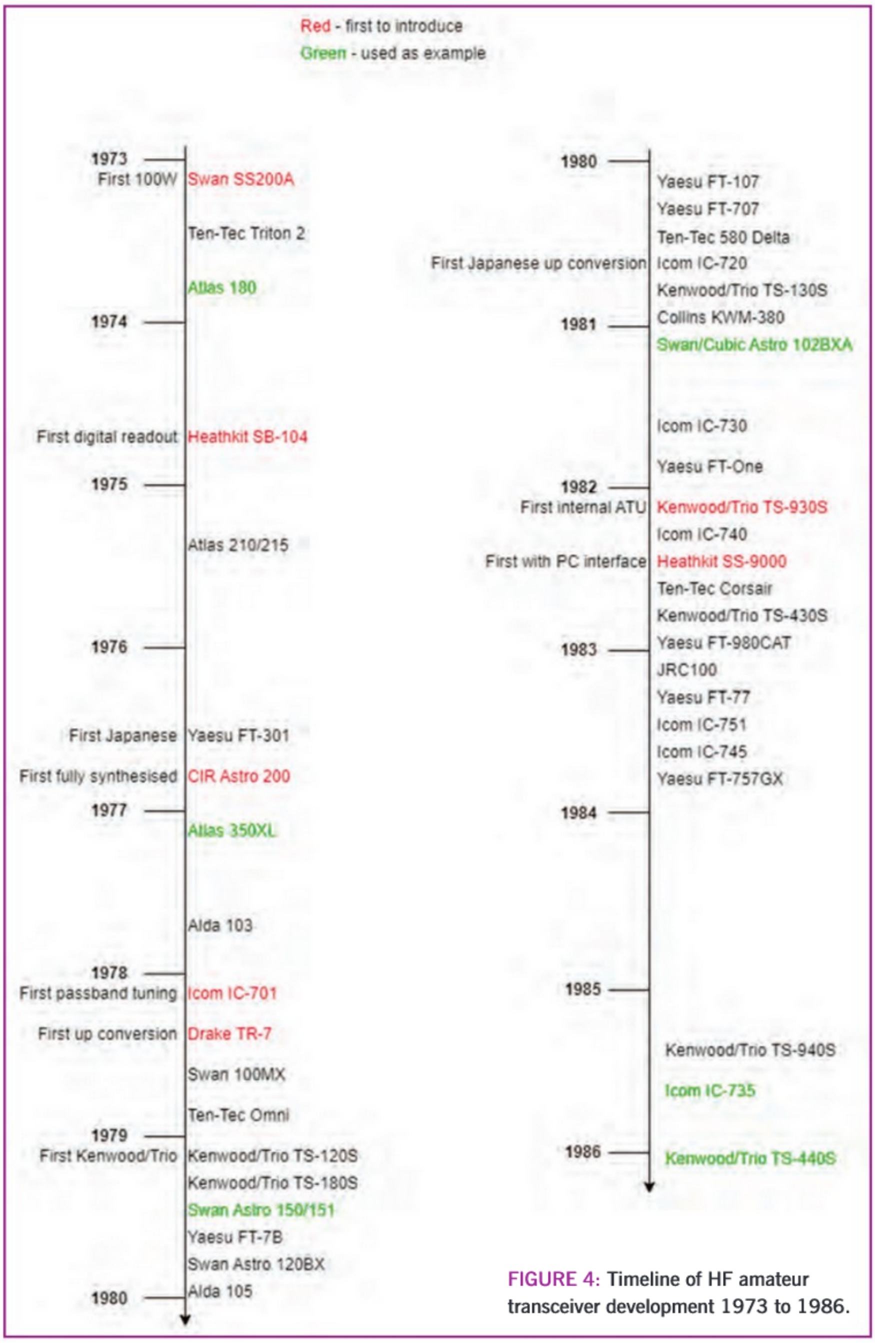

FIGURE 4: **Timeline of HF amateur transceiver development 1973 to 1986.**

IF filters if a higher IF is used. The solution is to have a double-conversion superhet. The first IF is high (often 9MHz), to place the image response well away from the wanted signal, making the front-end filter design much more straightforward. This is then followed by a low IF, eg 455kHz, and high-performance IF filters.

Timeline

Figure 4 shows a timeline of dates of introduction of transceiver models, with technical developments highlighted as they were introduced in a particular radio. It also shows the radios that I shall use to illustrate the technology. The dates are those when the radio was first advertised, either in the US or UK.

The first fully-transistorised radio was the Swan SS-200A (**Figure 5**), introduced mid-1973. This was the high-power version of the SS series, the SS-15 and SS-100 being lower-power options. Although fully transistorised, its size and weight (at 8.6kg) were comparable with that of the valve radios. The design used single frequency conversion; the potential issue of image responses was managed using a 'preselector' which had to be adjusted to peak the wanted signal. The Atlas 180 (see **Figure 6**) was also fully transistorised. It was based on military designs developed by Southcom and, at the time of its launch, represented state-of-the-art technology. It used single conversion both on transmit and receive, and had a free-running VFO whose frequency changed for each band. This was unlike later developments where the VFO always covered the same frequency range, which was mixed with another signal to make the wanted local-oscillator frequency. There was no preselector; the front-end filters were carefully designed and adjusted for each band to remove images. The radio was much lighter than the Swan SS-200A (3.4kg versus 8.6kg) and only a third the size. This made it better for mobile use as it could be mounted easily. I have seen a Swan 200A mounted in a car, but it was a much-bigger challenge!

FIGURE 5: **The first all-solid-state transceiver: Swan SS-200A, 1973.**

FIGURE 6: **The Atlas 180 fully-transistorised transceiver.**

Figure 7 shows a block diagram of the Atlas 180. The figure shows separate transmit and receive components for clarity, although in practice switching allowed the same mixers, amplifiers and filters to be used for both transmit and receive.

First digital frequency display

Figure 8 illustrates, for a particular model, how the digital frequency display was achieved. The receive frequency was determined by measuring the local oscillator used to convert

Bob Harris, G4APV
bob@whirlow.org

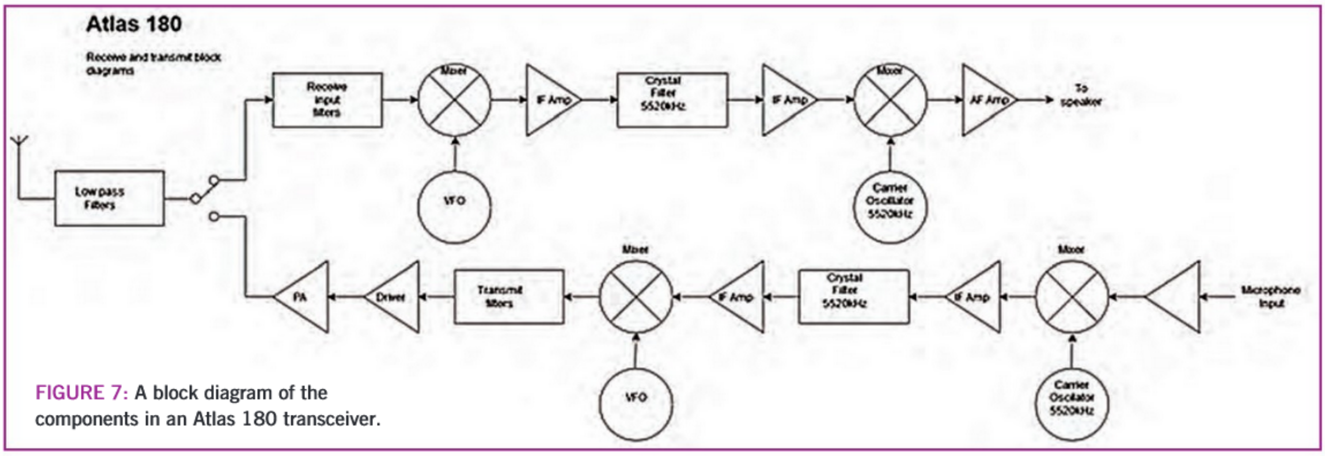

FIGURE 7: A block diagram of the components in an Atlas 180 transceiver.

the incoming signal to the IF. The display showed the count of a counter with the IF added or subtracted using control logic.

Although digital frequency displays had previously been available on hybrid radios (eg the Yaesu FT-501), they gradually became the norm during the late 1970s. The first fully-transistorised radio with a digital readout was the Heathkit SB-104 (**Figure 9**). This was available as a kit and was introduced in 1974, and was updated several times until about 1982. It was relatively sophisticated, using a double-conversion receiver as well as providing a digital frequency display.

The Atlas 350X (**Figure 10**) was Atlas's attempt in 1977 to take on the Japanese high-end radios. However, it ultimately led to the company's bankruptcy as the transceiver could not be produced economically. Only some 1000 were made, so they are relatively rare. It has a multitude of functions and would have been a contest-grade radio in its day. Unfortunately, this complexity tends to make it unreliable and temperamental; at least, mine is! The Clipperton dxpedition of 1978 used Atlas 350XLs, a fact that Atlas used in its advertisements. Sadly, this did not save the company. When working correctly, it was good to use, and reviews at the time indicated that its receiver was quiet and robust in the presence of strong signals.

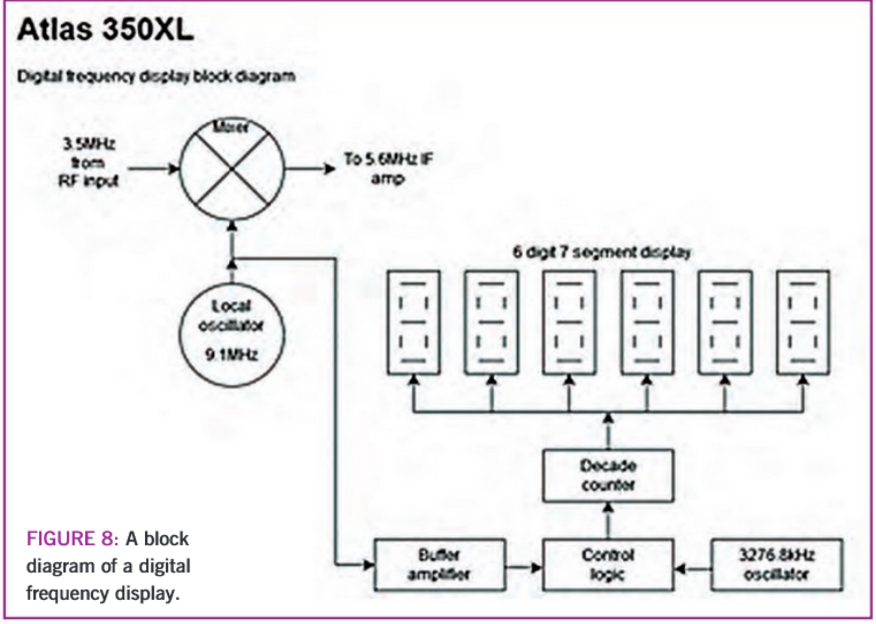

FIGURE 8: A block diagram of a digital frequency display.

FIGURE 9: The Heathkit SB-104, 1974.

FIGURE 10: The Atlas 350XL, 1977.

Synthesised tuning

The first fully-synthesised radios used two frequency synthesisers (see **Figure 11**). The first frequency synthesiser (the band-switch oscillator) produced a fixed-frequency output for the band in use and was controlled directly by the band switch. The second synthesiser produced the 'VFO' output in 100Hz steps, which was mixed with the band-switch oscillator to provide the frequency used for transmit or receive.

The CIR Astro 200 (**Figure 12**) was completely synthesised using two phase-locked loops to generate the transmit and receive local-oscillator signals. The Swan Astro 150 (**Figure 13**) was a direct descendant of the CIR Astro 200, and was the first transceiver made in volume that was completely synthesised. It was sophisticated and used two frequency synthesisers, which were each controlled by an early microprocessor (the Intel 8048). The same microprocessor also drove the display, and all-band switching was electronic, apart from that for the output filters. The synthesiser produced a tuning system which Swan called 'variable rate scanning' (VRS). To use this, the tuning knob was turned from the central "off" position, and then the further it is moved from that position, the faster it tuned up or down the band. I found this awkward and slow to use, and the feature could not have helped sales. However, it did allow for the

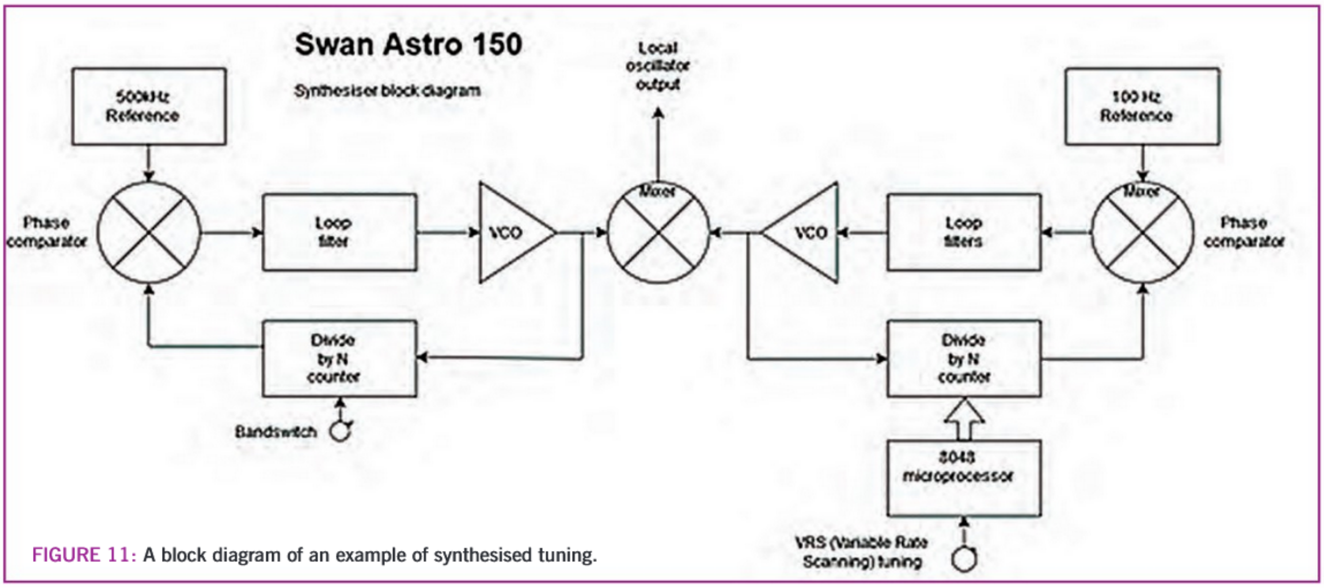

FIGURE 11: **A block diagram of an example of synthesised tuning.**

introduction of 'up' and 'down' tune buttons on the microphone, clearly useful in mobile use. I assume this approach was adopted as it was the best that the technology of the time would allow. A rotary encoder of the type now used in radios would have been expensive, and may well have produced data faster than the early processors could have coped with.

Synthesiser plus VFO

An approach that overcame the awkward VRS tuning system of the Swan Astro 150 was to have an analogue VFO to produce a frequency which was then mixed with a synthesised band oscillator (see **Figure 14**). This approach had the advantage of allowing the VFO to operate over the same range of frequencies, regardless of the band in use. The variable oscillator could then be optimised for linearity and stability.

An example of a transceiver using this arrangement was the Cubic Astro 102BXA (**Figure 15**). The Astro 102BXA used a permeability-tuned oscillator (PTO) with a variable inductor within the VFO, rather than a variable capacitor. As far as I can determine, a PTO was chosen as it provided better stability and was more linear than using a variable capacitor. I have to admit I find this a spectacularly-ugly radio with the two huge tuning knobs in the middle. I know that shouldn't matter, but I don't to care to look at it for too long, so it tends to sit on the shelf most of the time.

First pass-band tuning


FIGURE 12: **The CIR Astro 200, 1976.**

The first Icom transceiver available was expensive, but it provided facilities such as twin VFOs, pass-band tuning, speech processing, and digital readout (the Icom IC-701, 1978, see **Figure 16**). Additionally, it was one of the first to use a custom large-scale integrated circuit to control the radio, and this provided the possibility of remote control via a dedicated controller. **Figure 17** illustrates how pass-band tuning was achieved. It is well described in the Astro 102BXA manual: "The basic band-width is set by a crystal filter in the IF. After that filter, a circuit is included to translate that IF frequency (sic) to another frequency, usually higher. The signal is then passed through another crystal filter, of similar bandwidth as the first, and then translated back to the first IF frequency. If the frequency of the oscillator used to translate the signal to and back from the second IF is such that the pass-band of the two filters line up, no change in the bandwidth is noticed; however, if this oscillator frequency is made variable, the pass-bands of the two filters no longer line up, and either the upper or the lower end of the pass-band of the first filter is cut off by the second." See **Figure 18**.

This approach was used on all radios of this era. However, its implementation involved significant extra electronics and another crystal filter, all of which pushed up the cost.


FIGURE 13: **The Swan Astro 150, 1979.**

The appearance of up-conversion

Frequency up-conversion, in which the first IF is much higher than the received frequency, was first implemented in the Drake TR7 (**Figure 19**), although it had been used on some commercial radios earlier, eg the Racal RA17. This soon became the norm on amateur HF radios because of the performance advantages. The use of a high IF (40MHz or more) places the image into the VHF range, allowing for simple filters to be used on the receiver input. The high IF is then followed by a second conversion to a low IF (<10MHz) where the receiver band width is set at, say, 2.7kHz for SSB use. Another advantage is that a general-coverage receiver can be much more easily implemented as the range that the first oscillator has to cover is only a small fraction of its operating frequency. A third frequency conversion may also be used in some cases. **Figure 20** shows an example block diagram. The IC-735 (**Figure 21**) converted the wanted signal to 70.45MHz. The image was removed by a low-pass filter, followed by one of a series of band-pass filters, each of which covered an overlapping part of the HF spectrum. The signal was then filtered with a 15kHz filter (the so-called 'roofing' filter), amplified, and converted to 9MHz. The receiver's final band

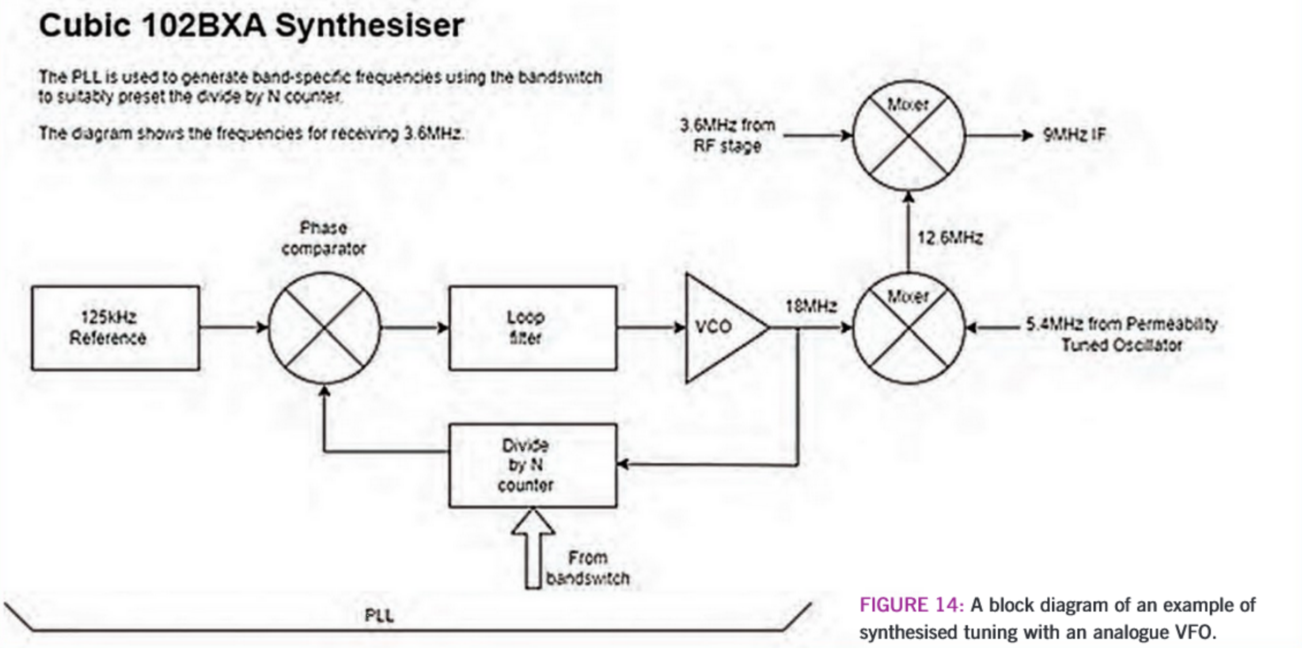

FIGURE 14: **A block diagram of an example of synthesised tuning with an analogue VFO.**

FIGURE 15: **The Cubic (Swan) Astro 102BXA, 1979.**

width was set by the filter at 9MHz; this was typically 2.7kHz for SSB or 300Hz for CW. Demodulation of all modes then took place after a final conversion to 455kHz.

Whilst somewhat later than the Drake TR7, the IC-735 is a good example of how up-conversion was implemented in a mainstream, mid-range transceiver. The radio is still good to use, its performance still being more than adequate for most purposes. It is small, making it a good choice for mobile or portable use. Although it is processor-based with PLL tuning, it does not have menus, all controls being on the front panel. Some are hidden behind a tinted cover that seems to irritate some people, although, frankly, I can't see why.

FIGURE 16: **The Icom IC-701, 1978.**

Internal antenna tuning units

The internal automatic antenna tuning unit (auto-ATU) was first introduced on the Trio TS930S (**Figure 22**). It is based on a T-match network but, unlike current radios which used multiple switched capacitors and inductors,

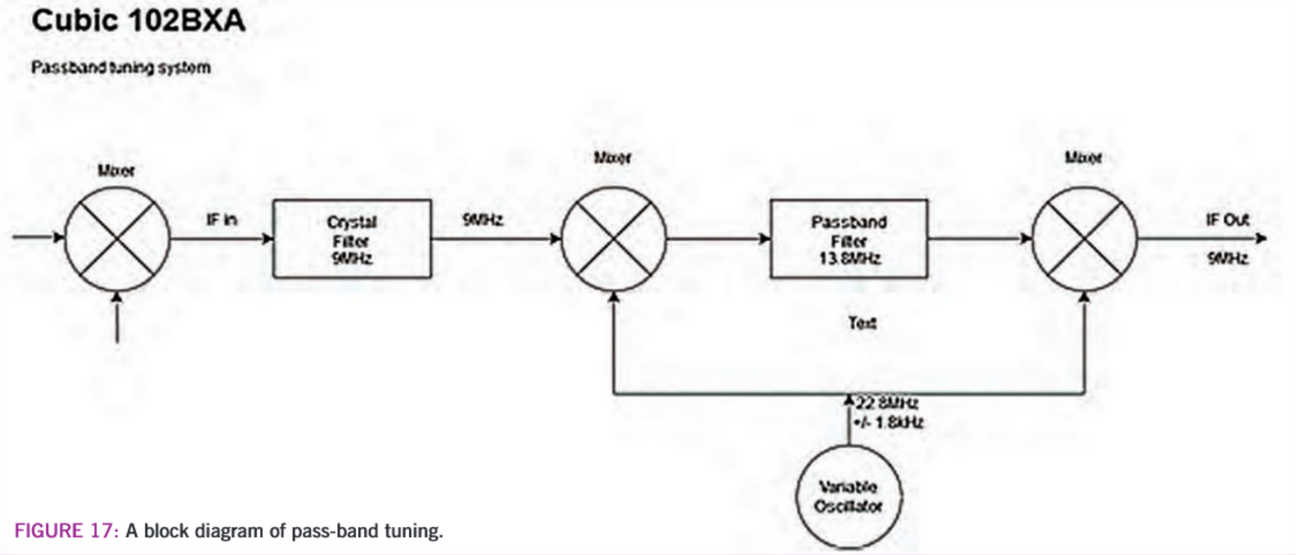

FIGURE 17: **A block diagram of pass-band tuning.**

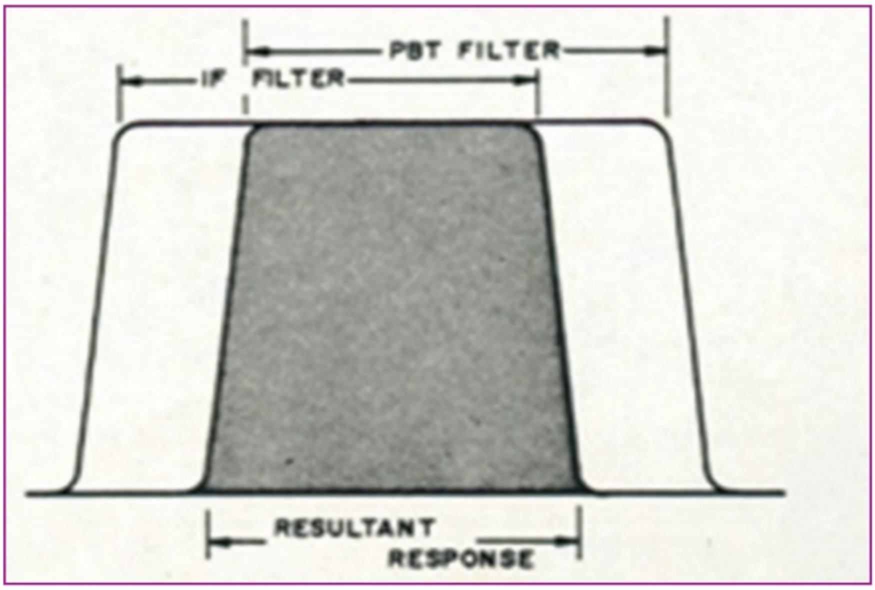

FIGURE 18: Pass-band tuning: an extract from the Astro 102BXA manual.

this used two motorised variable capacitors and a switched, tapped inductor. **Figure 23** shows how it goes. The VSWR measurement includes both the voltage and the current from the PA. The control system is completely analogue and drives the motors to achieve a match. This done by driving C1 and C2 until the measured VSWR is below 1.2:1. The inductor setting is done on a band-by-band basis, and is not changed during auto tuning.

The TS-440S (**Figure 24**) has an auto-ATU which is based on that of the TS-930S. The ATU uses a T-match circuit below 18MHz, and a pi-match circuit above 18MHz. It has an inductor with six taps and two motorised variable capacitors. The control circuit selects the inductor, based on the band in use, and then drives the capacitor motors to reduce the VSWR to a level below 1.25:1. In practice, this works well but is rather slow compared to the switched-capacitor and inductor approach currently used. Of course, moving parts are unlikely to be as reliable as a switched approach. Having said that, my TS-440S is still working well after some 40 years. Interestingly, the TS-440S's main competitor would have been the Icom IC-735, which did not have an internal ATU. This would have given the TS-440S an advantage when used for mobile communications.

Computer control

Computer control appeared with the Heathkit SS-9000 (**Figure 25**). This was a high-end transceiver which was expensive compared to its competitors. This was not available as a kit and apparently only some 375 were ever made, probably because of its high price. However, computer control was basic, and was intended to connect to a standard terminal; in fact Heathkit referred to it as a 'terminal interface'. The interface used standard RS232C levels and data rates up to 9600bps. The commands allowed control of band, mode, frequency, transmit/receive and some other functions.

The Icom IC-735 (**Figure 26**) brought computer control to the mid-range transceiver market, and introduced Icom's CI-V interface. This was a standard fitting and offered computer control only via an optional interface. The interface had a speed of 9600bps and all the major functions on the radio could be controlled via this interface. In the late 1980s, I built a mobile system using these commands to allow me to mount an IC-735 in my car's boot, together with a small control box on the dashboard. Now, using an Arduino, this is easy. Back then, it was quite a challenge! The CI-V control system has evolved and newer Icom radios (for example, the IC-7300) can have all functions controlled or read out using it.

FIGURE 19: The Drake TR7, 1978.

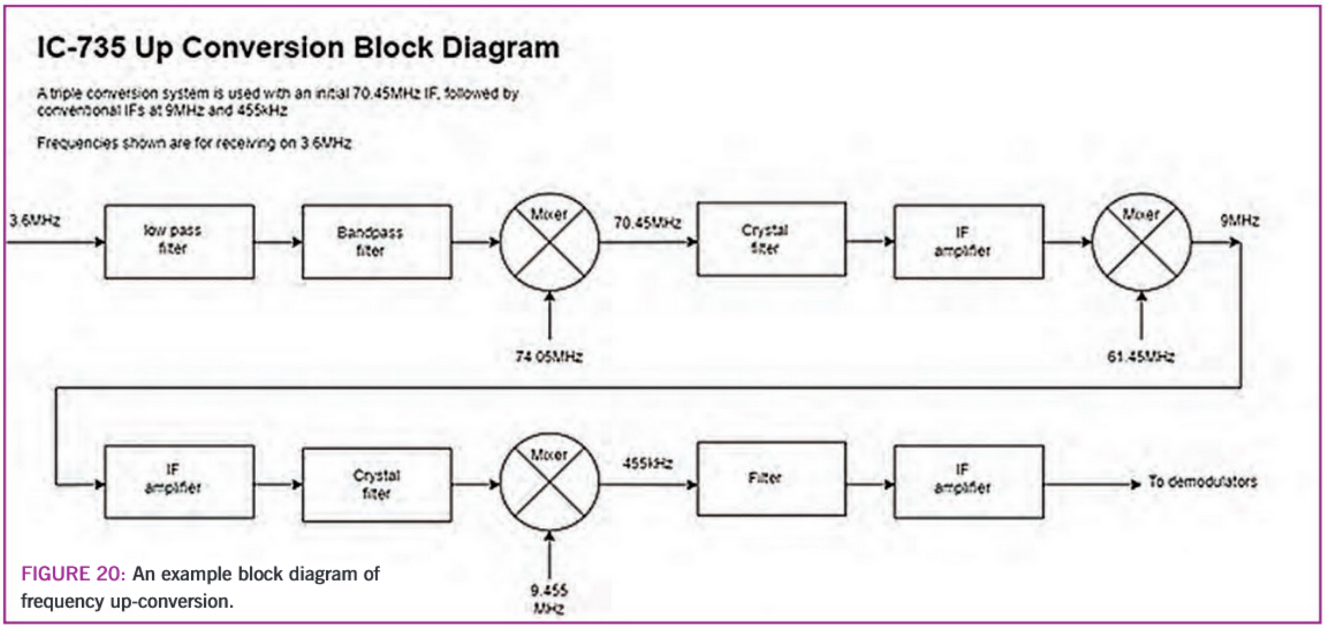

FIGURE 20: An example block diagram of frequency up-conversion.

FIGURE 21: **The Icom IC-735, 1985.**

Transceiver construction

As well as the technology changing between 1973 and 1985, there were changes in the way the radios were built. There was a move, mainly driven by Japanese manufacturers, towards mass-production construction techniques, leading to volume production and therefore, improved affordability.

Early radios were built with the following characteristics:

- A valve legacy with tag boards and other bits scattered around, and multiple boards, each of which performed only one or two functions
- Plug-in boards or point-to-point wiring
- Folded and punched sheet-metal cabinets, with heavy-gauge internal metal compartments
- Sheet-metal front panels
- Convection-cooled PA heat sink
- connectors (mic, key, ant etc.) mounted onto the chassis or front or rear panels and
- long switch bars through the radio for band switching

By 1985, things had moved to:

FIGURE 22: **The Trio TS930S, 1982.**

- Using a small number of larger boards
- Cast metal frames for some parts
- Moulded plastic front panels
- Forced air-cooled heat sinks
- Front and rear panel connectors mounted directly onto the circuit boards, which aligned with chassis holes and
- Band switching using relays and diodes

Conclusion

The early 1970s to mid-1980s saw huge changes in technology, allied with mass-production constructional techniques. Although perhaps not clear at the time, it marked the rise of the Japanese brands to a position of dominance by about 1990. It can be debated why they rose to prominence, but a combination of reliability, sophistication and value for money are the reasons that strike me.

Radios of this era are still perfectly usable on HF. Just don't expect the ultimate in performance (which most of us don't need or use). However, you do need to feel confident enough to repair radios of this era. This is not the challenge it might seem; the printed circuit boards use through-hole components, and these are often standard parts. I have repaired all of mine; most of the issues were poor connections, or previous 'experts' fiddling with the radio.

Acknowledgement

I'd like to thank Simon Dabbs, DU9AQQ, for editing this and making sure I am not talking nonsense.

More information

1. The Buyer's Guide to Amateur Radio, Angus McKenzie, RSGB 1986
2. Atlas 180: http://atlas.wireless.org.uk/history.htm
3. Heathkit SB-104: https://www.qsl.net/k5bcq/sb104/sb104.html
4. Yaesu FT-301 http://qrp.gr/ft301vfo/
5. CIR Astro 200 https://rantechnology.com/ and search for 'Astro…Don Stoner's legacy'
6. Drake TR-7 http://www.wb4hfn.com/DRAKE/DrakeArticles/InsideTheTR7/Inside_The_TR7-01.htm
7. Heathkit SS-9000 https://www.pestingers.net/pages-images/heathkit/radio-equipment/ss9000/ss9000.htm

YouTube videos of radios

1. Swan SS-200: https://www.youtube.com/watch?v=Yi4uyZm5mAA
2. Icom IC-701 https://www.youtube.com/watch?v=XU7UcXwroNU
3. Atlas 180 video https://youtu.be/LLgeXaHrR9Y
4. Atlas 350XL video https://youtu.be/SMNWgck7sw8
5. Astro 150 video https://youtu.be/Mv9btvPCzgw
6. Astro 102BXA video https://youtu.be/-QvLppqQCJM
7. Icom IC-735 video https://youtu.be/Im0jDBXO8io
8. TS-440S video https://youtu.be/u-mVYCIFRZY
9. TS-930S https://www.youtube.com/watch?v=JWV_pZQFdZQ

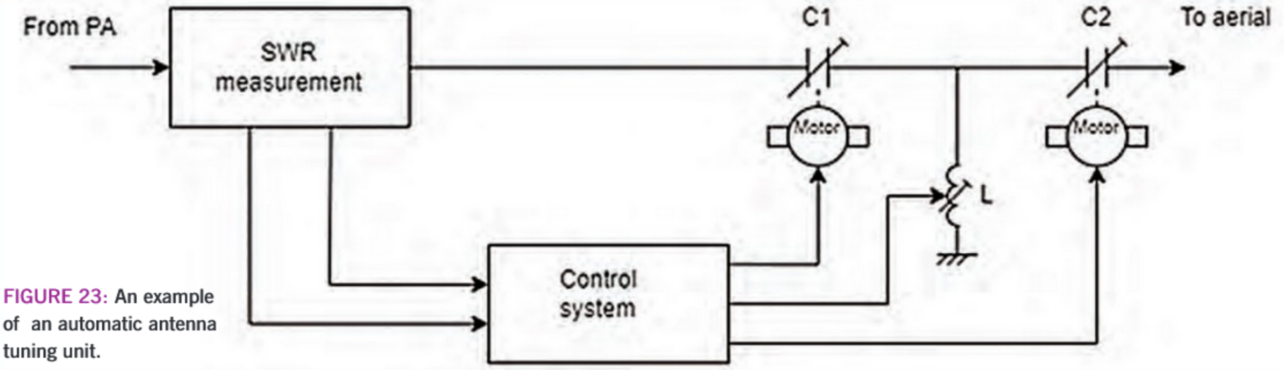

FIGURE 23: **An example of an automatic antenna tuning unit.**

FIGURE 24: **The Trio TS-440S, 1986.**

FIGURE 25: **Heathkit SS-9000, 1982.**

FIGURE 26: **The Icom IC-735, 1985.**

bhi NCH-W
noise-cancelling wireless headphones

The company bhi has built up a fine reputation for its noise-reducing products, but has now branched out into noise-cancelling headphone technology.

Introduction

The company is best known for its amateur-radio products, but you might be surprised to find its products are in use everywhere, from reducing noise in CAT scanner treatment rooms in hospitals, to in-car noise cancelling for motorsport and transport applications. Graham Somerville, M3ZGS, owner and managing director of bhi, designs and manufactures a range of DSP noise-cancelling products that remove unwanted background noise and interference from noisy voice and radio communication channels to leave clear speech. Founded in 2002, bhi quickly came to market with its first noise-cancellation product, the NES10-2 DSP noise-cancelling speaker. Other products soon followed, and it now has an established world-wide distribution network. Its products are manufactured in the UK and overseas under the IS09001 quality standard. On test this month are its NCH-W wireless noise-cancelling headphones (see **Figure 1**). As bhi's website says:

"The NCH-W are especially good to use when travelling on a train or airplane. The adjustable headband and high-quality ear pads are durable and a comfortable fit on any head. You have complete control to power on/off, adjust volume, noise cancelling on/off, answer and make phone calls. The noise cancelling technology allows you to attenuate the outside noises by 18dB to 25dB of volume. With all its features the NCH-W are a great choice for any office, home, or outdoor application."

So, let's dig a little deeper.

Out of the box

The headphones are quite impressive. They have folding earpieces so don't take up too much space when travelling. They feature a padded headband with chrome-finish fittings. This is adjustable to fit different-sized heads and is quite comfortable. The earpieces are made from black plastic and feature the bhi logo. They are large, measuring 95mm by 75mm, and feature comfortable foam covers. They are quite efficient on their own as external noise is reduced quite a lot without switching on the noise cancellation. This is known as passive noise reduction. One earpiece carries the controls, which are an on-off push button, two volume-control buttons (one up and one down), and a button marked 'M', which is for switching on the active noise cancellation (see **Figure 2**). Next to these is a 3.5mm stereo socket for plugging in the supplied cable for wired operation.

There is also a micro-USB socket for charging the internal battery. A short USB-A to micro-USB cable is supplied with the headphones. You will have to provide a 5V USB power supply, but any phone charger or power bank should suffice. You just insert the charging cable and the red charging light comes on. It will extinguish when fully charged. Charging takes around 2.5 hours, which gives up to eight hours of operation.

FIGURE 1: The NCH-W noise-cancelling wireless headphones.

To turn the headphones on, just press and hold the on/off button for three seconds. The blue and red LED will flash, and you get an audio announcement in English through the headphones. When using them in wireless mode (Bluetooth), you must first pair them with your device. Again, after switching on, go into your Bluetooth settings and search for wireless device PSG3412-M292 and click 'connect'. Once connected the blue LED will flash slowly.

The headphones are good for music as they have a frequency response of 20Hz to 20kHz and an output power of 30mW. Listening to music with my iPhone, I found that the bass response and fidelity were better than with my existing headphones.

You can increase or decrease the volume by pressing and holding the '+' or '-' buttons.

A short press on the '+' and '-' buttons will play the next or last song respectively, and a short press of the on/off button will pause the music while a further press will restart it.

And its features don't end there. If you get a call while listening to music you can answer it with a short press of the on/off button. Another short press will end the call. You can also redial the last number by pressing the on/off button twice in either standby mode or during music play.

Noise cancellation

And so on to the active noise-cancelling (ANC) feature. This helps in noisy environments such as aircraft, trains, and public transport, and offers up to 18-25dB active noise reduction. To switch ANC on, just press the 'M' button; a green LED shows that it is on.

So how does it work? ANC uses microphones to pick up external noise and then produce a counter sound wave that neutralises the noise. This 'anti-noise' process is particularly effective against low-frequency sounds, such as the drone of an aircraft engine or general background hubbub.

But what about amateur radio use? I used the headphones in wired mode with my Yaesu FTDX-3000 and they worked fine. I was worried that their wide frequency response would not suit amateur radio applications, but it wasn't a concern. My one criticism is that the supplied headphone lead is a little short. I tested the ANC with a vacuum cleaner next to the operating position, not having a spare airliner to hand! It worked well, boosting the wanted audio and reducing the ambient noise.

As for Bluetooth, a number of companies now supply Bluetooth adaptors for a range of radios, including the Icom IC-7300 and Yaesu FT-710.

You can even buy a generic Bluetooth adaptor on ebay for less than £10 that takes the audio output from a rig through the headphone socket and passes it to a Bluetooth headset. Latency (or delays) when using Bluetooth for a CW sidetone may be an issue, but this wasn't tested.

FIGURE 2: The controls and sockets.

Conclusion

In all then, these are fine headphones for everyday use, comfortable, with good audio and active noise cancellation. They even work well in the shack. My thanks to Graham at bhi for the review headphones.

Steve Nichols, G0KYA
infotechcomms@googlemail.com